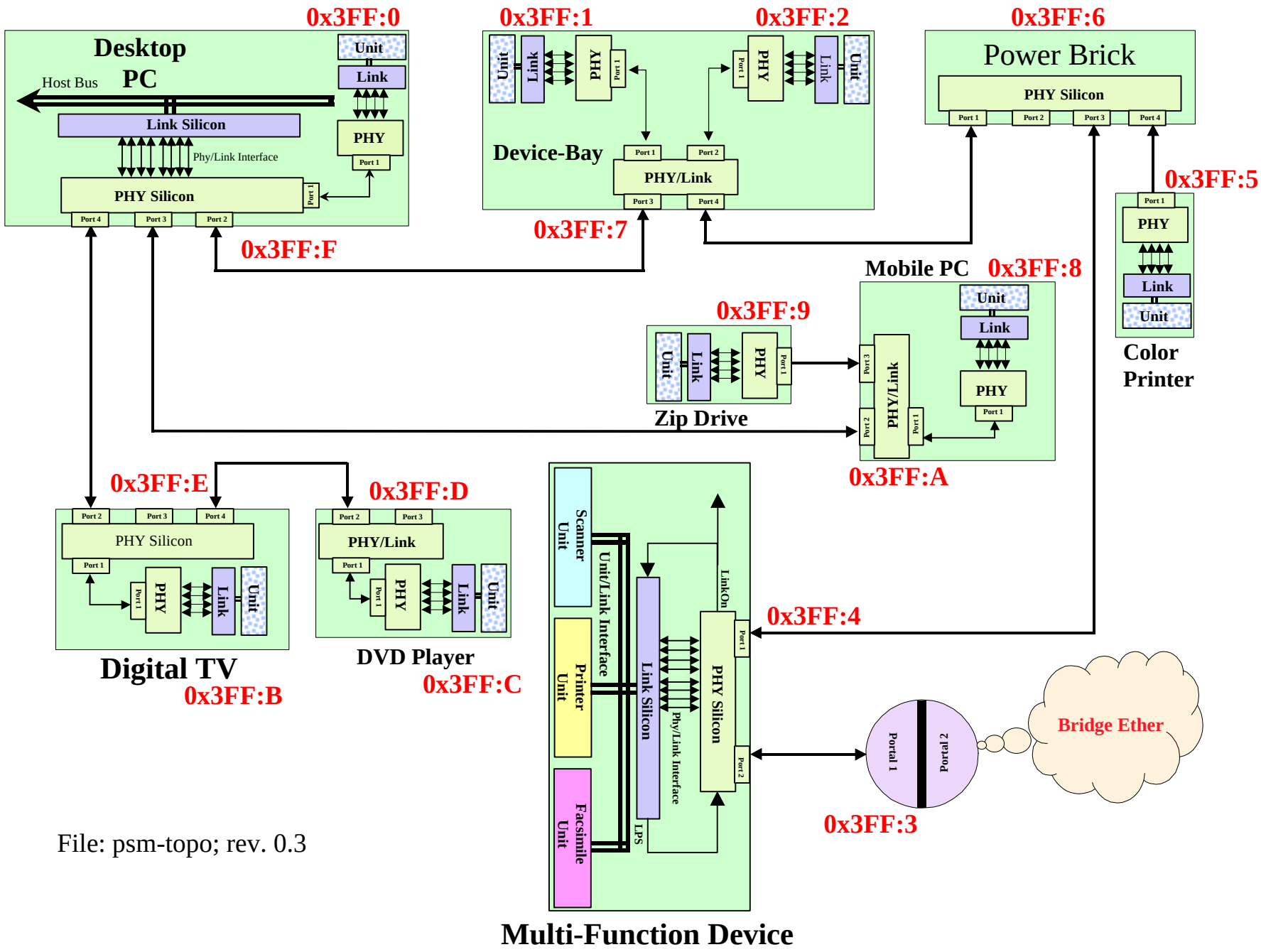

File: psm-topo; rev. 0.3