Multimode Battery Energy Storage System For Custom Power Applications

Rao S. Thallam

Salt River Project
Phoenix, Arizona
e-mail: rsthalla@srp.gov

Steve Eckroad

EPRI
Palo Alto, California
e-mail: seckroad@epri.com

Abstract: EPRI and Salt River Project (SRP) have installed a multi-mode transportable battery energy storage system (TBESS) manufactured by Omnion Power Engineering Corporation, as part of a joint tailored collaboration project. The TBESS is capable of operating in both power quality and power management modes. In power quality (PQ) mode, it is capable of protecting the loads up to 2 MW / 2 MVA for up to 15 seconds against voltage disturbances including complete outages. In power management (PM) mode, it can deliver 200 kW for 45 minutes, i.e., 150 kWh. The power management modes are, peak shaving, block load discharge, load following, voltage regulation and spinning reserve. TBESS has been under test at an SRP site since August 1997. In addition to the disturbances in the utility distribution system against which TBESS protected the loads during this period, TBESS performance was tested for more than 150 simulated and real outages lasting several seconds. This paper presents mainly the power quality performance results during this test period.

Keywords: power quality, battery energy storage, power management, voltage sags, UPS

I. INTRODUCTION

Power quality is becoming increasingly important, as the loads that are sensitive to even small voltage variations or disturbances are being increasingly utilized by the customers. For large manufacturing process, data processing and other sensitive industries, a small voltage sag or an outage of a few cycles duration can interrupt the process and thereby cause significant financial losses and production scheduling problems. Hence equipment to mitigate voltage disturbances is needed at some customer sites. Also, deregulation and competition in the electric utility industry is creating a need for energy storage for power management applications. The TBESS serves both requirements since it is capable of operating in both power quality and power management modes. The TBESS is combination of two products in one, PQ2000 and PM250, manufactured by Omnion Power Engineering Corporation, East Troy, WI. In the power quality mode, it is capable of protecting the loads up to 2 MW / 2 MVA for up to 15 seconds against voltage disturbances (sags and surges) including complete outages. Used in this mode, TBESS protects entire facilities or facility feeders from power disturbances, as opposed to smaller, distributed uninterruptible power supply solutions that only protect specific processes. In power management mode, TBESS can deliver 200 kW, for up to 45 minutes (150 kWh) at 480 V ac. Power management mode of operation is by programmed schedule only. If a power quality disturbance occurs during any of the power management modes, TBESS will immediately switch to power quality mode. At the end of power quality event, it will switch back to the power management mode to complete the scheduled discharge.

The TBESS detects and isolates the load against power quality disturbances in less than four milliseconds, and the transfer is transparent to the loads. To test TBESS to the full rated capability, two resistive load banks each of 650 kW have been connected to augment the building loads.

II. DESCRIPTION OF OPERATION

The schematic of the multi-mode TBESS is shown in Figure 1. Under normal conditions, power is supplied from the utility system to the customer's load through the static isolation switch (Electronic Selector Device, ESD). The utility disturbance monitor continuously monitors the supply voltage, and when it detects any disturbance beyond the threshold limits, the master control will open the static switch by gating off the SCRs to isolate the load from the faulted utility supply voltage. The master control matches the output power of the TBESS to the customer load, up to 2000 kVA. The entire sequence including the disturbance detection time and raising the output power to match the load takes place in less than 4 milliseconds. When the utility supply voltage returns to the normal value within the specified tolerance, TBESS will synchronize the output

0-7803-4893-1/99/$10.00 (c) 1999 IEEE

voltage with the utility supply voltage and closes the static switch. In most cases, voltage sags last only a few cycles. Hence the TBESS can mitigate several such successive disturbances without requiring recharging of the batteries.

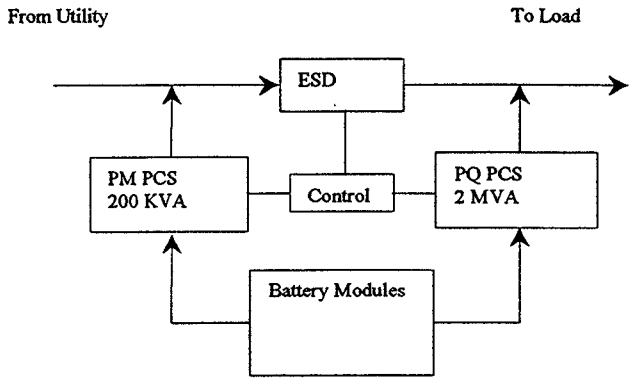

Fig. 1. Schematic of TBESS

TBESS was delivered to SRP's Cross-Cut site and installed in July, and went on line in August 1997. TBESS is connected to serve the loads of Building 36 at SRP's Cross-Cut site, which is an office and warehouse facility with a maximum load of about 550 kVA including air conditioning and computer load of about 300 kVA. To test the TBESS to the rated capacity against power quality disturbances, two resistive load banks, each of 650 kW (total 1300 kW) were installed. The Test Program was designed to fully exercise all of TBESS' capabilities under a combination of real and simulated operating conditions. The test configuration is shown in Figure 2.

III. PERFORMANCE FOR VOLTAGE SAGS CAUSED BY FAULTS AND SWITCHING IN UTILITY SYSTEM

Since the installation in August 1997, there were about 30 events when TBESS protected the building 36 loads against the voltage disturbances. These voltage sags were caused by faults in the 230 kV system, 69 kV system and the parallel 12 kV feeder from the 12kV Cross-Cut substation. In some cases, for faults in parallel 12 kV feeder, TBESS input voltage went near zero for several cycles.

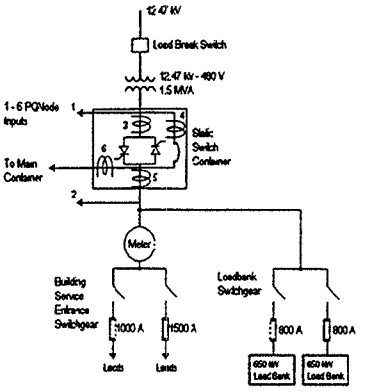

Figure 2: TBESS Test Arrangement

The maximum number of power quality events occurred in August 1997, soon after installation of the TBESS. In Phoenix area, severe thunderstorms are experienced each August during the "monsoon" period. Of the 13 events that occurred in August, there were two clusters of events, one on 8/14/97 and another on 8/26/97. The events on 8/14/97 were caused by a phase C to ground fault on a parallel 12 kV feeder, and repeated closing on to the faulted feeder five times in a period of an hour. The events on 8/26/97 were caused by series of thunderstorms in the area causing faults in several 69 kV lines. Details of these events are described below:

A. Events on 8/14/97

The first event occurred at 05:54 PM when a fault on feeder 1151, a parallel 12 kV feeder adjacent to the 12 kV feeder (1152) supplying the Cross-Cut building. The fault depressed Phase C voltage to less than 10% of the nominal value (90% sag) for a period of about seven cycles. The TBESS detected the disturbance and protected the building. This event was repeated four times during the next 50 minutes, as the SRP operations reclosed the breaker onto the faulted feeder. The waveforms as recorded by the Dranetz-BMI PQNode 9010/9020 for one of these events is shown in Figures 3 and 4.

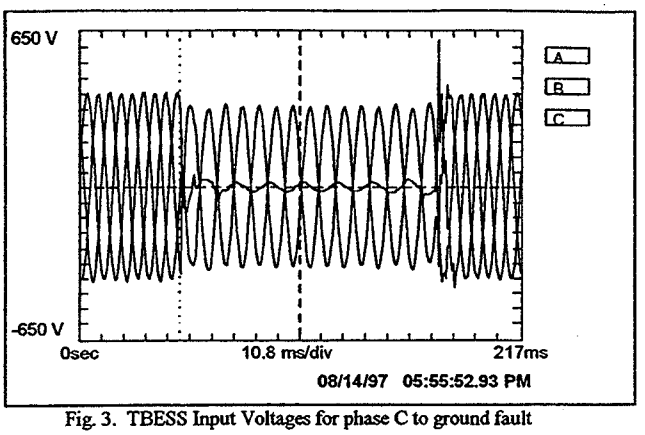

Fig. 3. TBESS Input Voltages for phase C to ground fault

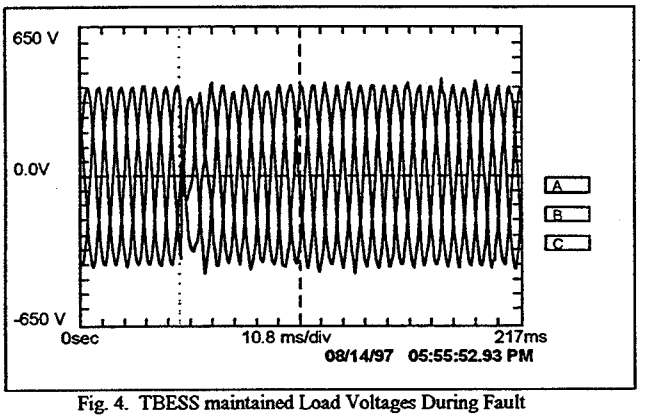

Fig. 4. TBESS maintained Load Voltages During Fault

B. Events on 8/26/97

A series of severe thunderstorms passed through the Phoenix area that morning causing several faults in the 69 kV system. In a period of about an hour and half, five voltage sag events severe enough to trigger operation of the TBESS occurred at the Cross-Cut site. The details of each voltage sag magnitude and duration are given in Table 2.

Table 1. PQ Event Log on 8/26/97

Event No	Time Occurred	Voltage Sag (% nominal)	Duration (Cycles)
1	8:1 8:10:17	73	8
2	8:3 8:30:26	67	8
3	8:3 8:37:27	53	10
4	8:5 8:55:14	88	10
5	9:3 9:36:44	85	4

TBESS' response for one event (No. 2 in table 1) is shown in Figure 5.When the Phase B voltage sagged to 67 %, TBESS detected the voltage sag and prevented the sag from affecting the load.

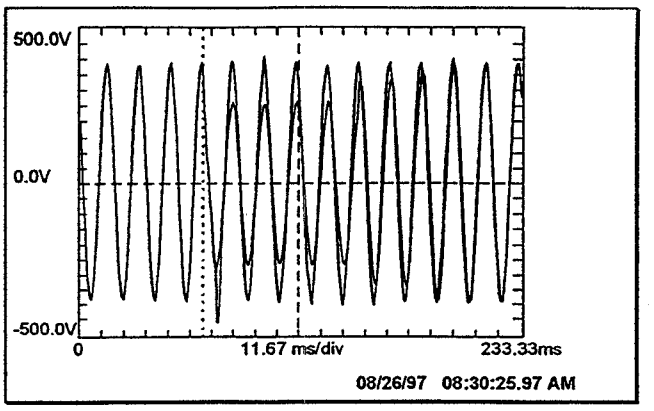

Fig. 5. Input Voltage and Output Voltage, Phase B, for event on 8/26

C. Performance for Outage

Energy storage capability is essential for voltage sag mitigation equipment to function properly when the voltage sag is deep or when the voltage goes to zero. TBESS has energy storage capability to protect the loads even when the supply voltage goes to zero up to 15 seconds. During the period August 1997 through March 1998, TBESS performance was tested for utility system outages, both in single mode power quality tests, and also as part of multi-mode (power management + Power quality events) testing. During these tests, the load on the TBESS was increased to near 2 MW, by adding the resistive load banks of 1300 kW rating to the existing building load. The outage was simulated in two ways. First, outages created by opening the 12 kV load break switch (see Fig. 2) feeding the 12 kV / 480 V service transformer to the building, for periods of 1 to 15 seconds. This creates a real loss of supply voltage to the building; the TBESS then supplies power to the building during the outage. Some tests were also conducted by simulating a loss of utility voltage by removing the voltage signal to the TBESS control for periods of 1 to 15 seconds. The TBESS control then assumes there is a loss of utility voltage, opens the static switch and disconnects the utility voltage to the load. The TBESS will then supply power to the load until the voltage signal is restored to the control, which will then close the static switch.

The TBESS performance for a real outage caused by opening the12 kV load break switch is shown in Figures 6 and 7. The load did not experience any loss of voltage even during the first half cycle of the outage.

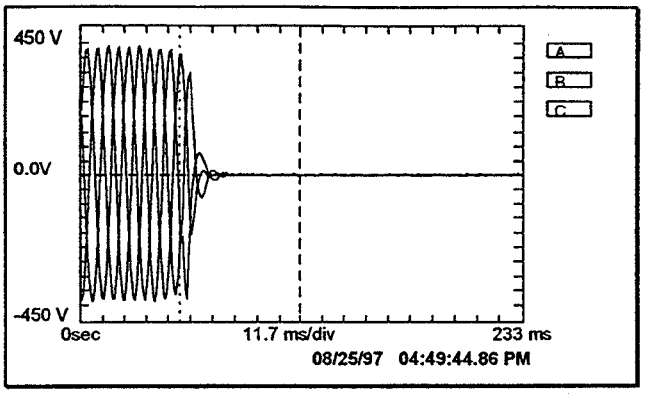

Fig. 6 TBESS Input Voltages when 12 kV Load Break Switch Opened

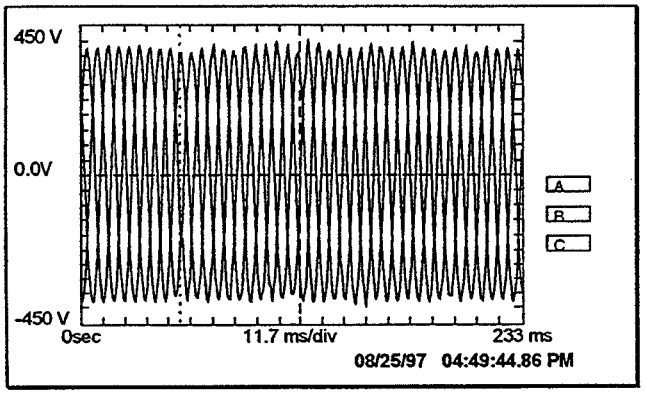

Fig. 7 TBESS Maintained Output (Load) Voltages During System Outage

D. Operating Losses

The steady state standby/ready mode losses of a power quality mitigation device are a consideration in evaluating the application. TBESS losses are a function of the load. When protecting a load of 2000 kVA, the following are daily operating losses:

Air conditioning:	27.6 kWhrs
Control Power:	9.6 kWhrs
ESD SCRs:	360.0 kWhrs
Total:	397.2 kWhrs

Majority of losses occur in static switch (ESD) which are due to SCR forward conduction losses. When operating at full load, TBESS will have an efficiency of 99%.

IV. CONCLUSIONS

The world's first multi-mode transportable battery energy storage system has been installed at a utility site and has been under performance evaluation since August 1997. It operated correctly, within it's capability, for all the disturbances caused by faults in the 230 kV, 69 kV, and parallel 12 kV feeder in the utility system. TBESS can protect sensitive loads up to 2 MVA rating for up to 15 seconds duration against voltage disturbances including outages. The project proved feasibility of multi-mode operation of battery energy storage system. However, several hardware and software problems were experienced and resolved during multi-mode testing. Economic evaluation of the benefits of multi-mode energy storage system is part of the project scope.

V. ACKNOWLEDGEMENTS

Contributions of the following to this project are acknowledged. Dr. Philip Symons of Electrochemical Energy Consultants Inc., consultant during testing phase of this project, Michael Chandler at SRP. Omnion Power Engineering Corporation, East Troy, WI, manufactured the TBESS.

VI. REFERENCES

1. Eckroad, S. W., "Design and Cost of Standardized Lead-Acid Battery Systems for Utility Energy Management, Final Report," EPRI Report EM-4200, August 1985, pp. 2-5.

2.Eckroad, S.W., and Thallam, R.S., "Multimode Battery System Takes Benefits on the Road" Power Quality Assurance, March/April 1998, pp. 52-56.