Changes and Additions to 1450.1 document (6/21/01)

1. Issues list

This is a list of issues or questions that I have with regard to the current state of dot-1 (tony).

1. Tony: sig_var, integer_list, boolean_expr, and all the examples included in this doc.

2. Tony: (page 17) Request that WFCMap be moved from Signals/SignalGroups to Timing for the following reasons:
   - if WFCMap is associated with Signals it can never be adjusted according to domain
   - the Timing block is where the wfc's get defined on for each signal for a given pat-exec and hence is the appropriate place to define mapping
   - the Signal/SignalGroups block has no way of knowing if wfc chars are being used that don't actually exist. The Timing block would have this knowledge.

   ```
   Timing name {
      SignalGroups name;
      WCFMap {
         sigref_expr {
            { z->x; 01->x; }
         }
      }
      WaveformTable W { }
   }
   ```

3. Peter: requested to add issue #3 to this list: the Waveform event CompareSubstitute, defined to support enhanced diagnostic return and "known-good die" learning capability. Greg attached the issue to the bottom of these minutes for subsequent review by the group.

4. Doug: identified that he owes the group a write-up on the "merge()" function, currently still open from last discussions on the BreakPoint designation issue.

5. Doug: identified that the Else construct needs to be added to the current spec.

2. New Variable and Expression Definitions

Table 1: Variable and Expression Usage

expr-type	variable types	where defined	where used	syntax examples
engr_expr - time_expr - voltage_expr etc. - etc.	time integer real @label	Spec SignalGroups Spec Timing	Timing	‘23.0ns/2+16.5e-9-t2’ ‘t1/i + r - t2’
real_expr	time integer real @label	Spec SignalGroups Spec Timing	Pattern	same as a timing expressions except that it may be used in a non-engr unit context. e.g. volts/ns.
integer_expr	integer	SignalGroups	Pattern Timing CTL	PatternCharacteristics -> NumberVectors ‘max * mode’;
integer_list	integer		BistStructures SignalVariables CTL	1,2,3,4,5 3, 6, 4, 5, 1, 2 1..5
sigvar_expr	SignalVariable	PatternGroups	Pattern	V { grp = ‘sv1’; } V { grp = ‘sv2[1..5]’; } V { grp = ‘sv3[5 4 2 3 1]’; }
logical_expr	integer time real SignalVariable Signal SignalGroup	SignalGroups Spec Spec SignalGroups SignalGroups SignalGroups	Pattern	If ‘i == 0’ {} If ‘period > 23.0ns’ {} If ‘value < 3e-6’ {} If ‘sv2[1..5] == 11000’ {} If ‘(s1==H) | (s2==H)’ {} If ‘grp != HHHH’ {}
bool_expr				

The following variable types are to be defined in sec 10 - SignalGroups

1. Integer
   A variable of type “Integer” may be defined in the Signals block. It may be used in a logic_expr or bool_expr within a Pattern, Procedure or Macro block. An Integer variable may also be used in an engr_expr within a Timing block.
   According to dot-0 an integer can be used in a time_expr, however there is no way to define a spec variable of type integer. In dot-1 an integer variable can be defined and then be used in a time_expr:

2. SignalVariable - New type in dot-1. Was previously name WFC type. Name is changed to reflect that it follows similar rules to Signals and SignalGroups.

3. Enumeration - New type in dot-1

4. Real - This type is already allowed in the Spec block. Why do we want it to be in a SignalGroup block as well? To be removed from dot-1.

The following expression types will be defined in sec 5.n

1. logical_expr - new type in dot-1

2. boolean_expr
   A boolean expression (bool_expr) is a logical expression that evaluates to a true or false.
   Change references in document from logical_expr to bool_expr. i.e., in pattern->If conditions.

3. sigvar_expr - new type in dot-1
   A sigvar_expr is an ordered list of elements that operates like a sigref_expr but is not associated with any signal names. Its application is to hold signal data and to pass signal data between Patterns and Procedures/Macros. The output function of a sigvar_expr is an ordered string of wfc's. SignalVariable expressions are enclosed in single quotes. A SignalVariable expression may be assigned list of wfc values to a signal-variable. The signal-variable may be used to transfer the wfc values to either another signal-variable or to signal or signal-group.

```
sig_var[1..5] = 11100;
sig_var[5, 4, 2, 3, 1] = 00011;
```

4. cellref_expr - new type in dot-1. As defined in dot-1.

5. integer_expr
   An integer_expr is ...

```
SignalGroups {
   k Integer;
} // end SignalGroups

Timing { WaveformTable { Waveforms { sigref {
   XY { '2ns+k*(0.5ns)' U/D; }
}}}} // end Timing

Pattern P {
   C { 'k = k + 1'; }
   If 'k >= 99' {}
   Loop k {}
} // end Pattern
```

6. integer_list
   An integer_list is a reference type used to specify an ordered list of integer values. Allowed operators in an integer list are the comma "," which is the required integer separation character and the ellipe ".." which specifies a range of integers. Example usage is:

```
V { signame[5, 4, 3, 2, 1] = 11001; }

BistRegister reg {
   TapPositions 0, 2, 4, 6, 8, 10, 12;
   Connection prpg_sigs 0..25;
}
```

7. real_expr

An expression of type real is defined in a Spec table as defined in 1450-1999 document. The format of a real number is of the form: <number>e<+\-><number>. Real number can be used to represent things that are not standard SI units. For example a slew rate in volts/ns.

8. engr_expr
   An engineering expression (engr_expr) is the generic term for any expression of the form <number><prefix><SI unit>. For example, ‘23ns’ is a time expression, ‘10uf’ is a capacitance expression.

3. Operators and Functions

Two changes have been made to the table currently in dot-1. The unary operators are deleted, and the extra columns showing what operators are used by expression type have been added.

Table 2—Operators and functions allowed in expressions

Op	Definition	time	real	integer	logical	bool	sigvar
min()	minimum value	YES	YES	YES	YES	NO	NO
max()	maximum value	YES	YES	YES	YES	NO	NO
()	parenthesis	YES	YES	YES	YES	**YES**	**NO**
table 3, table 4 of IEEE Std. 1450-1999	SI units & prefixes	YES	NO	NO	NO	YES	NO
/	divide	YES	YES	YES	YES	NO	NO
*	multiply	YES	YES	YES	YES	**NO**	**NO**
+	add	YES	YES	YES	YES	NO	NO
-	subtract	YES	YES	YES	YES	**NO**	**NO**
%	**modulus**	**NO**	**NO**	YES	YES	**NO**	**NO**
<	less than (boolean value)	YES	YES	YES	YES	YES	NO
>	greater than (boolean value)	YES	YES	YES	YES	YES	NO
<=	less or equal (boolean value)	YES	YES	YES	YES	YES	NO
>=	greater or equal (boolean value)	YES	YES	YES	YES	**YES**	**NO**
!	**negation (boolean value)**	**NO**	**NO**	YES	YES	**YES**	**NO**
&&	**and (boolean value)**	**NO**	**NO**	YES	YES	**YES**	**NO**
||	**or (boolean value)**	**NO**	**NO**	YES	YES	**YES**	**NO**
==	equal (boolean value)	NO	NO	NO	YES	YES	NO
!=	not equal (boolean value)	NO	NO	NO	YES	YES	NO
~	**bit-wise negation**	**NO**	**NO**	YES	YES	**NO**	**NO**
&	**bit-wise and**	**NO**	**NO**	YES	YES	**NO**	**NO**
|	**bit-wise inclusive or**	**NO**	**NO**	YES	YES	**NO**	**NO**
^	**bit-wise exclusive or**	**NO**	**NO**	YES	YES	**NO**	**NO**
^~, ~^	**bit-wise equivalence**	**NO**	**NO**	YES	YES	**NO**	**NO**
~~*&*~~	~~*reduction and*~~						

Table 2—Operators and functions allowed in expressions

Op	Definition	time	real	integer	logical	bool	sigvar
~~&~~	~~*reduction nand (not-and)*~~						
~~|~~	~~*reduction or*~~						
~~|~~	~~*reduction nor (not-or)*~~						
~~^~~	~~*reduction xor*~~						
~~^, ^~~~	~~*reduction xnor*~~						
~~<<~~	~~*left shift*~~						
~~>>~~	~~*right shift*~~						
?:	conditional expression			YES	YES		NO
=	assignment	YES	YES	YES	YES	NO	NO
..	range operator (elipsis)	NO	NO	NO	NO	NO	YES

4. Signal Mapping Using SignalVariable and Expressions (sigvar_expr)

This example illustrates the following capabilities:

1. definition of SignalVariables in a SignalGroups block
2. use of parameters in a Macro (or Procedure call)
3. use of # to update the parameter values
4. application of parameters in a Macro (or Procedure)
5. use of logic expressions (logic_expr) with signal variables in a Macro (or Procedure)
6. process of re-using signal groups (un-mapped) as signal variables (mapped)

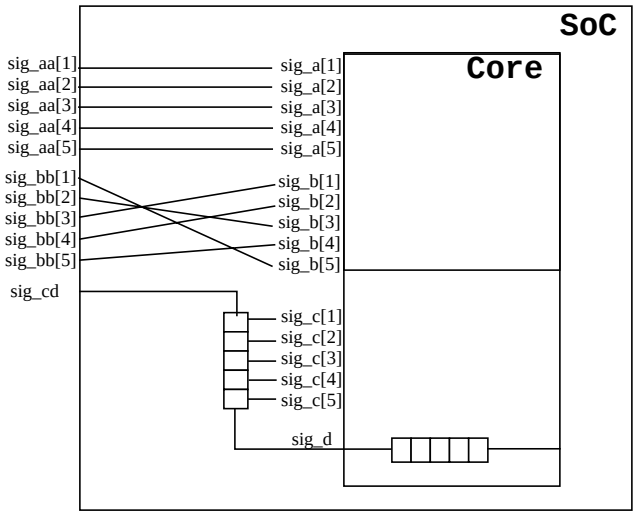

========== pattern ==========

```
Pattern pat_a {
   Macro mac_a {
      sig_a[1..5] = 10101;
      sig_b[1..5] = 11011;
      grp_c = 01010;
      sig_d = 00100;
   }
}
```

========== un-mapped ==========

```
Signals {
   sig_a[1..5] In;
   sig_b[1..5] In;
   sig_c[1..5] In;
   sig_d In { Length 5; ScanIn; }
}

SignalGroups {
   grp_c = 'sig_c[1..5]';
}

MacroDefs {
   mac_a {
      V { sig_a[1..5] = #; }
```

```
      V { sig_b[1..5] = #; }
      V { grp_c = #; }
      Shift {
         V { sig_d = #; }
      }
   }
}

===================== mapped =====================
Signals {
   sig_aa[1..5] In;
   sig_bb[1..5] In;
   sig_cd In { Length 10; ScanIn; }
}

SignalGroups {
   sig_a[1..5]    SignalVariable;
   sig_b[1..5]    SignalVariable;
   grp_c          SignalVariable { Length 5; }
   grp_c[1..5]    SignalVariable;
   sig_d          SignalVariable { Length 5; }
}

MacroDefs {
   mac_a {
      C { sig_a[1..5] = #; sig_b[1..5] = #; grp_c = #; sig_d = #;}
      V { sig_aa[1..5] = 'sig_a[1..5]'; }
      V { sig_bb[1..5] = 'sig_b[5 3 1 2 4]'; }
//    V { sig_bb[3 4 2 5 1] = 'sig_b[1..5]'; } // alternate stmt
      Shift {
         C { grp_c[5 4 3 2 1] = ‘grp_c’; }  <=== need to be outside shift?
         V { sig_cd = 'sig_d[1..5]' 'grp_c[1..5]' ; }
//       V { sig_cd = 'sig_d[1..5]' 00000 ; } // alternate stmt
//       V { sig_cd = 00000 'grp_c[1..5]' ; } // alternate stmt
      }
   }
}
```

5. Using Logic Expressions (logic_expr) in CTL

This example illustrates the following capabilities:

1. logic expression using & (and) operation
2. logic expression made up of signals, scan signals, and core signals
3. application in CTL of logic expression to define enable logic

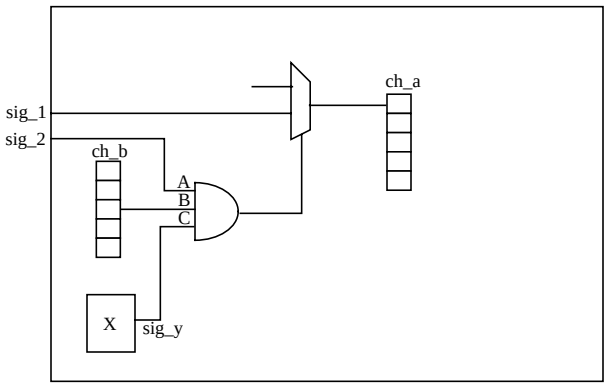


```
Signals {
   sig_1 In;
   sig_2 In;
}

Environment {
   CTL {
      Internal {
         sig_1 {
            IsConnected In {
               StateElement Scan cell_a1;
               IsEnabledBy Logic 'A & B & C' {
                  A { Type Signal; Name sig_2; }
                  B { Type ScanSignal; Name cell_b3; }
                  C { Type CoreSignal; Name core_x.sig_y; }
               }
            }
         }
      }
   }
```

6. Using Boolean Expressions (boolean_expr) in Patterns, Macros, and Procedures

This example illustrates the following capabilities:

1. use of parameters on a Macro (or Procedure)
2. use of logic expression in conditional-If/Else statements in a pattern
3. use of parameters in logic expression to create wfc data in a vector

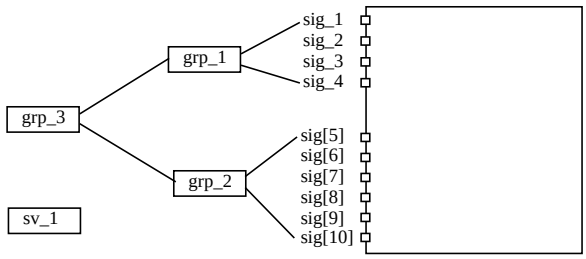


```
Signals {
   sig_1 In; sig_2 In; sig_3 In; sig_4 In;
   sig[5..10] In;
}
SignalGroups {
   grp_1 = ‘sig_1 + sig_2 + sig_3 + sig_4’;
   grp_2 = ‘sig[5..10]’;
   grp_3 = ‘grp_1 + grp_2’;
   sv_1 = SignalVariable { Length 4; }
}

Pattern pat_1 {
   Macro mac_1 { sig_1 = 1; sig_2 = 0; }
   Macro mac_2 { grp_1 = 1100; sv_1 = 0011; }
}

MacroDefs {
   mac_1 {
      C { sig_1 = #; sig_2 = #; }
      If ‘sig_1 == 1’ { V { sig_3 = A; }}
      If ‘(sig_1 == 1) & (sig_2 == 0)’ { V { sig_3 = B; }}
   }
   mac_2 {
      C ( grp_1 = #; sv_1 = #; }
      If ‘grp_1 == 1100’ {
         V { grp_3 = ‘sv_1’ 111111; }
      }
      Else {
         V { grp_3 =  ‘sv_1’ 000000; }
      }
   }
}
```