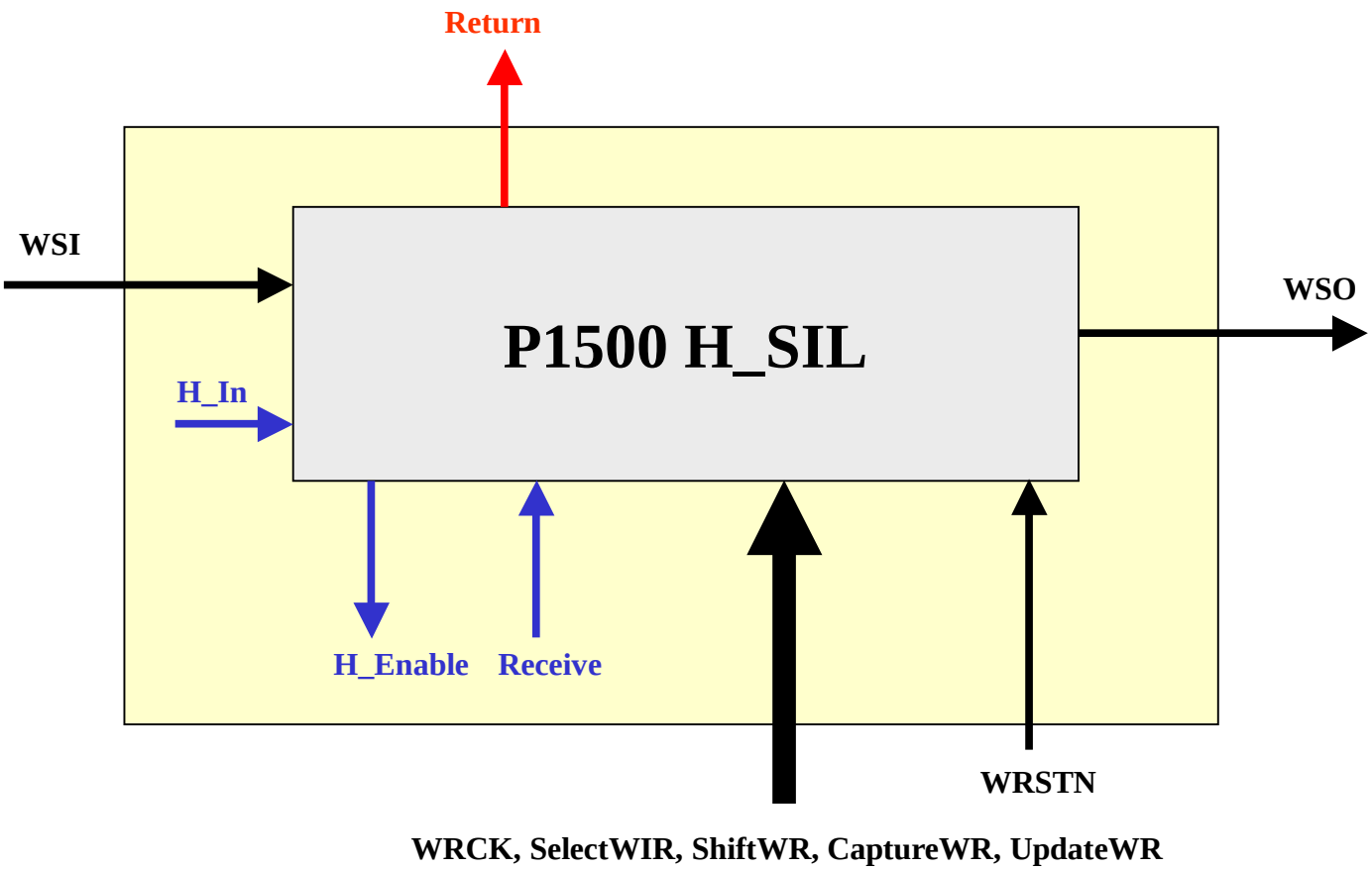
Return
WSI
P1500 H_SIL
WSO
H_In
H_Enable
Receive
WRSTN
WRCK, SelectWIR, ShiftWR, CaptureWR, UpdateWR

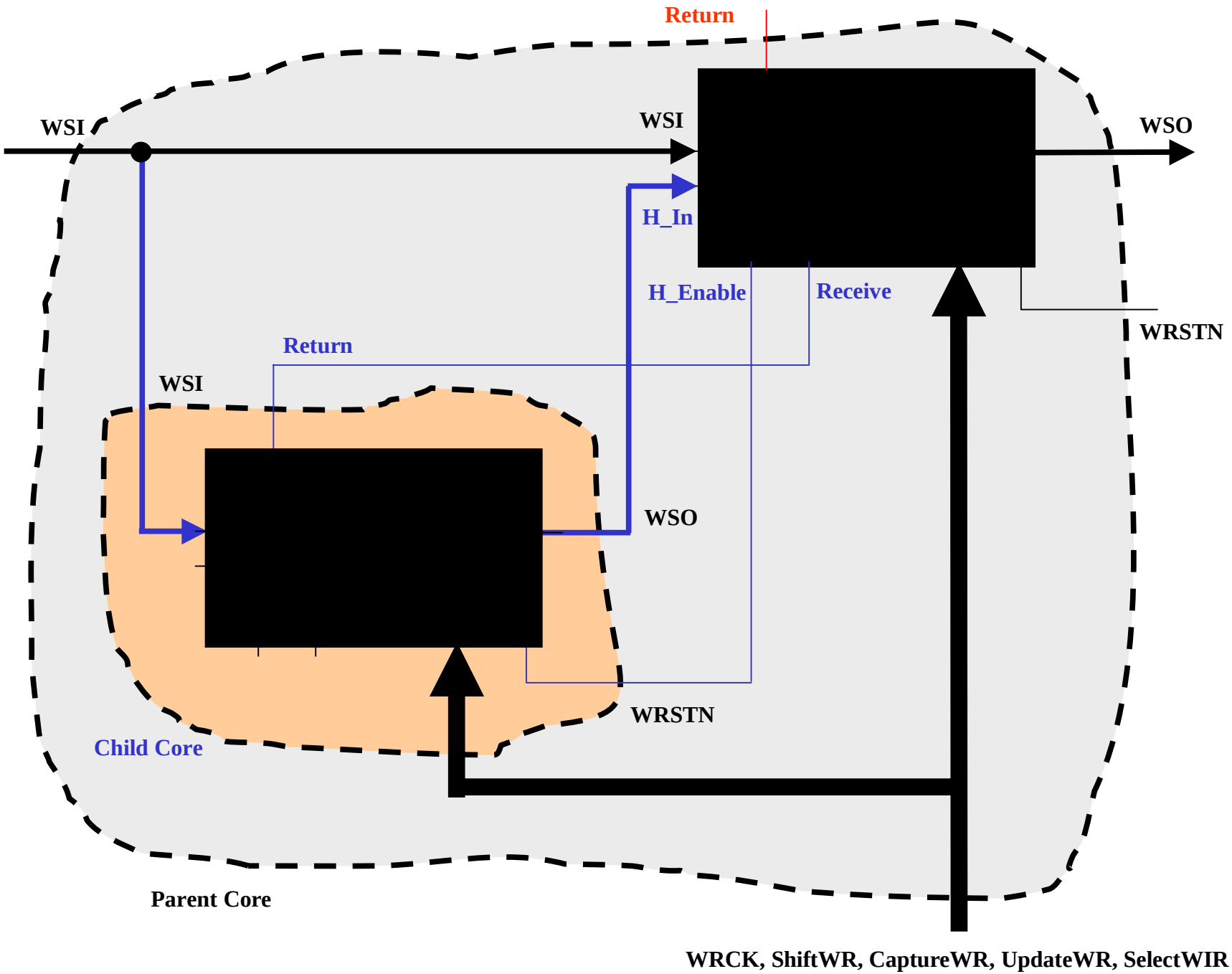
Return
WSI
WSI
WSO
H_In
H_Enable
Receive
WRSTN
Return
WSI
WSO
WRSTN
Child Core
Parent Core
WRCK, ShiftWR, CaptureWR, UpdateWR, SelectWIR

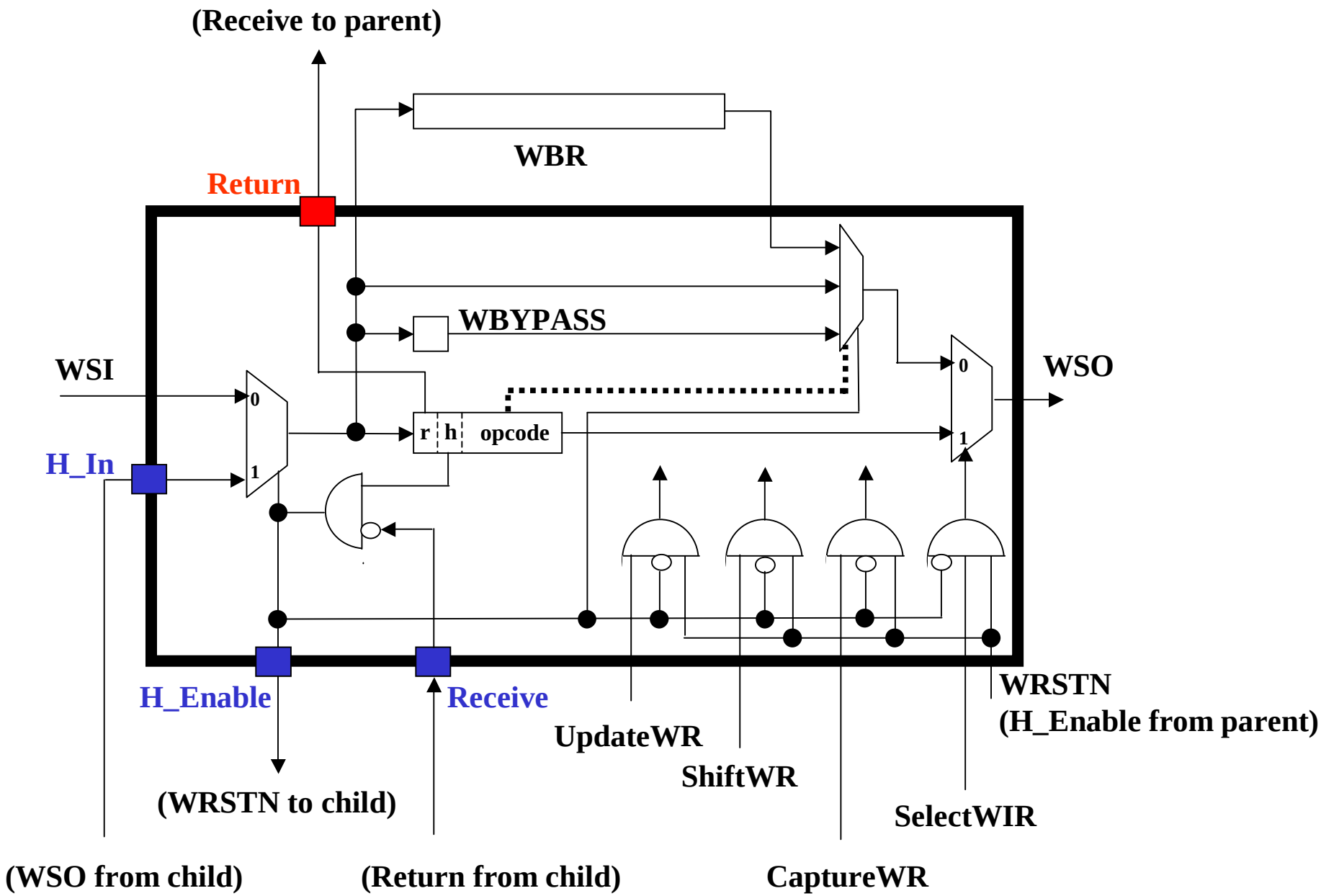
(Receive to parent)
WBR
Return
WBYPASS
WSI
0
1
r
h
opcode
0
1
WSO
H_In
H_Enable
Receive
WRSTN
(H_Enable from parent)
UpdateWR
ShiftWR
(WRSTN to child)
SelectWIR
(WSO from child)
(Return from child)
CaptureWR

H	R	Action
0	0	Normal operation
1	0	Enable Child
0	1	Return to parent
1	1	Enable Child, and remain enabled for SelectWIR = 1

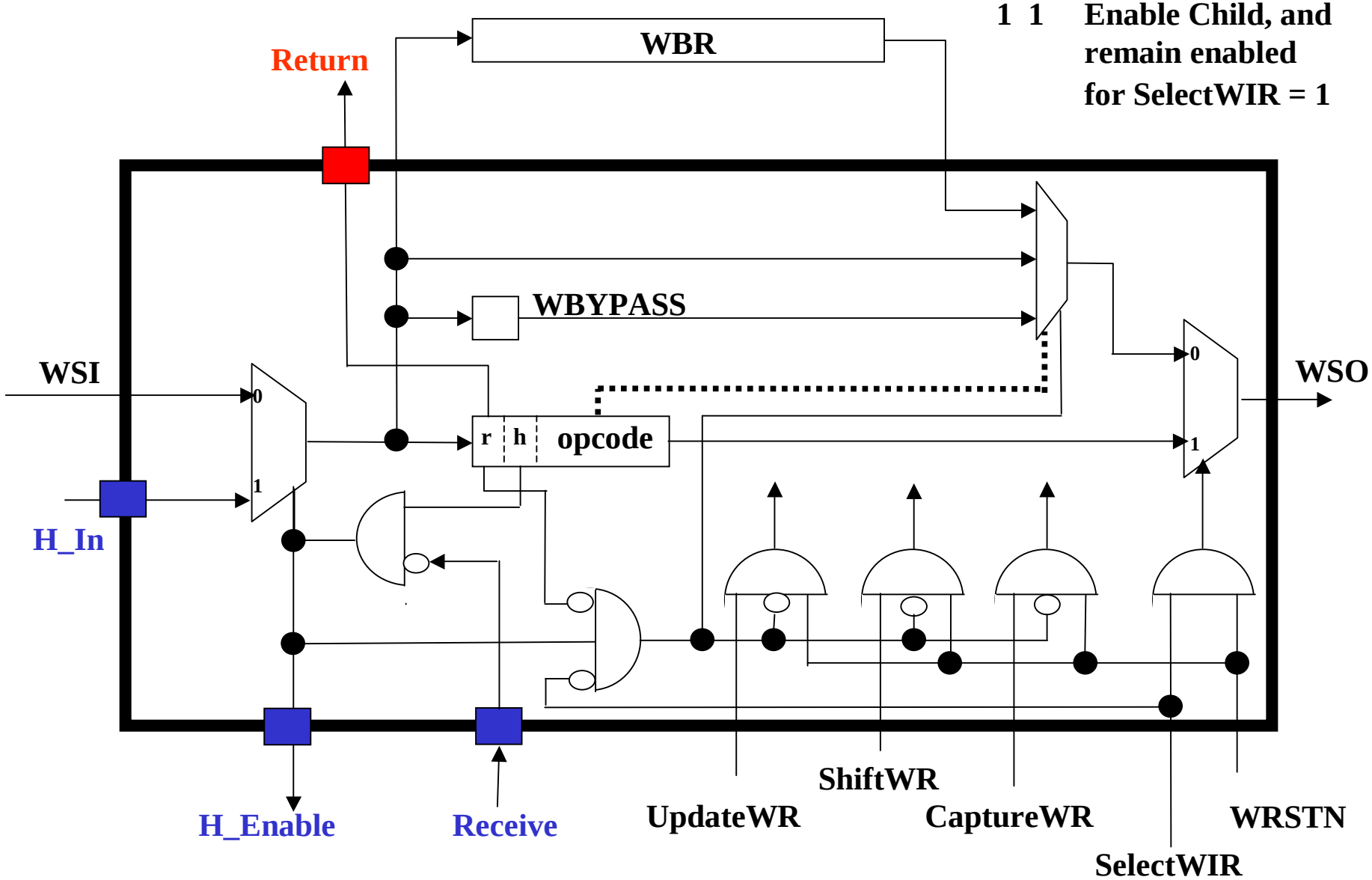

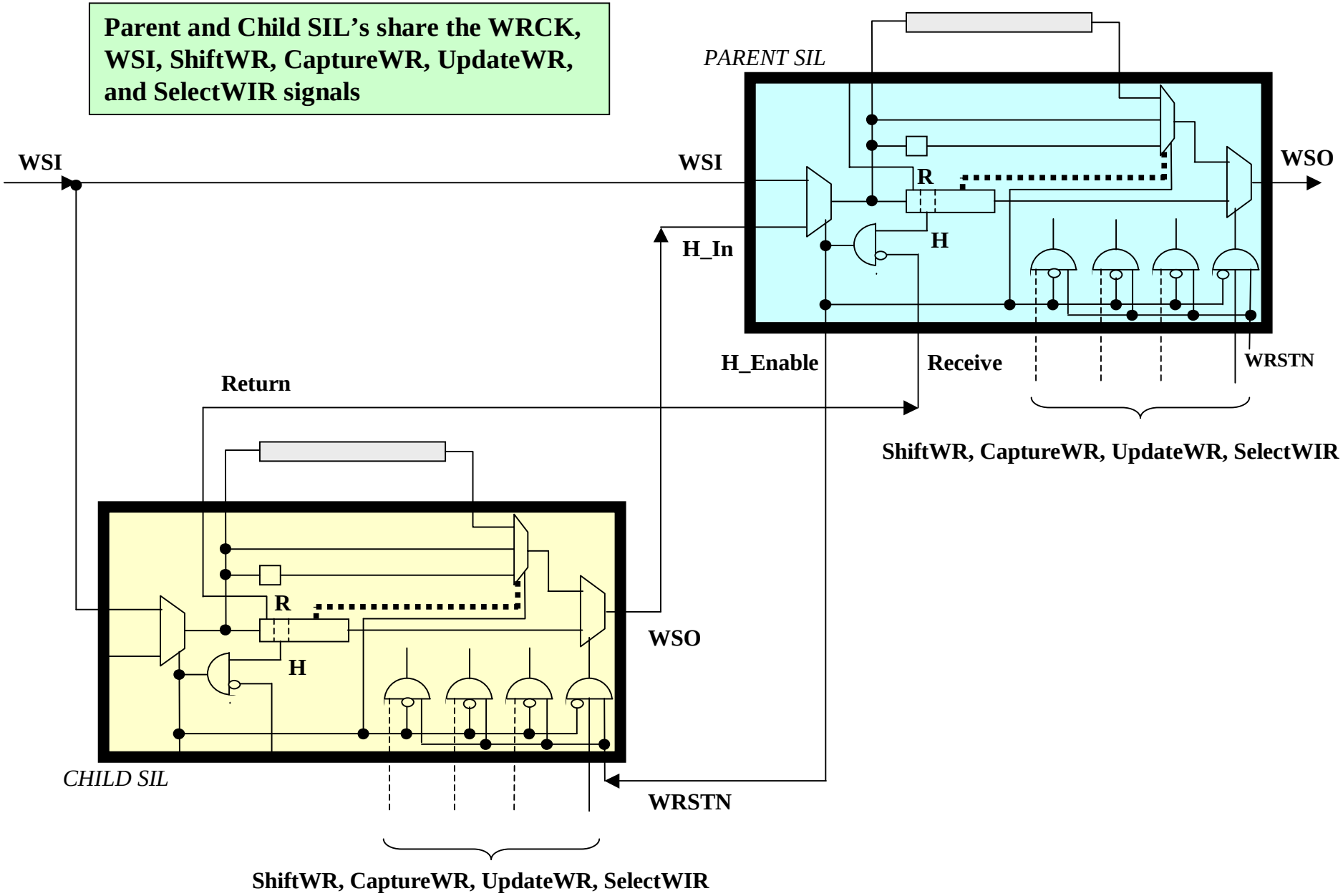
Parent and Child SIL's share the WRCK, WSI, ShiftWR, CaptureWR, UpdateWR, and SelectWIR signals
PARENT SIL
WSI
WSI
WSO
R
H
H_In
H_Enable
Receive
WRSTN
Return
ShiftWR, CaptureWR, UpdateWR, SelectWIR
R
H
WSO
CHILD SIL
WRSTN
ShiftWR, CaptureWR, UpdateWR, SelectWIR

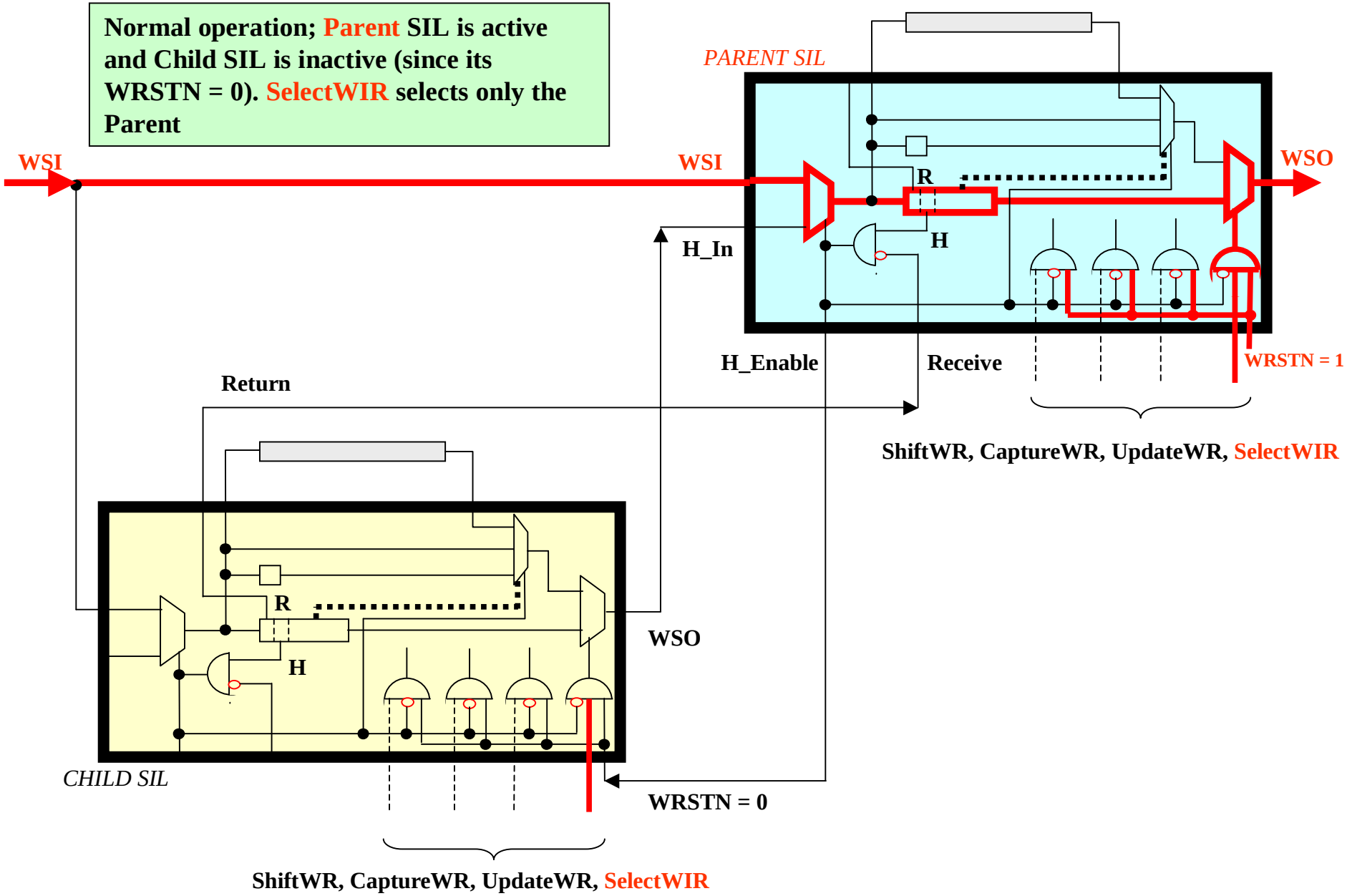
Normal operation; Parent SIL is active and Child SIL is inactive (since its WRSTN = 0). SelectWIR selects only the Parent
PARENT SIL
WSI
WSI
WSO
R
H
H_In
H_Enable
Receive
WRSTN = 1
Return
ShiftWR, CaptureWR, UpdateWR, SelectWIR
R
H
WSO
CHILD SIL
WRSTN = 0
ShiftWR, CaptureWR, UpdateWR, SelectWIR

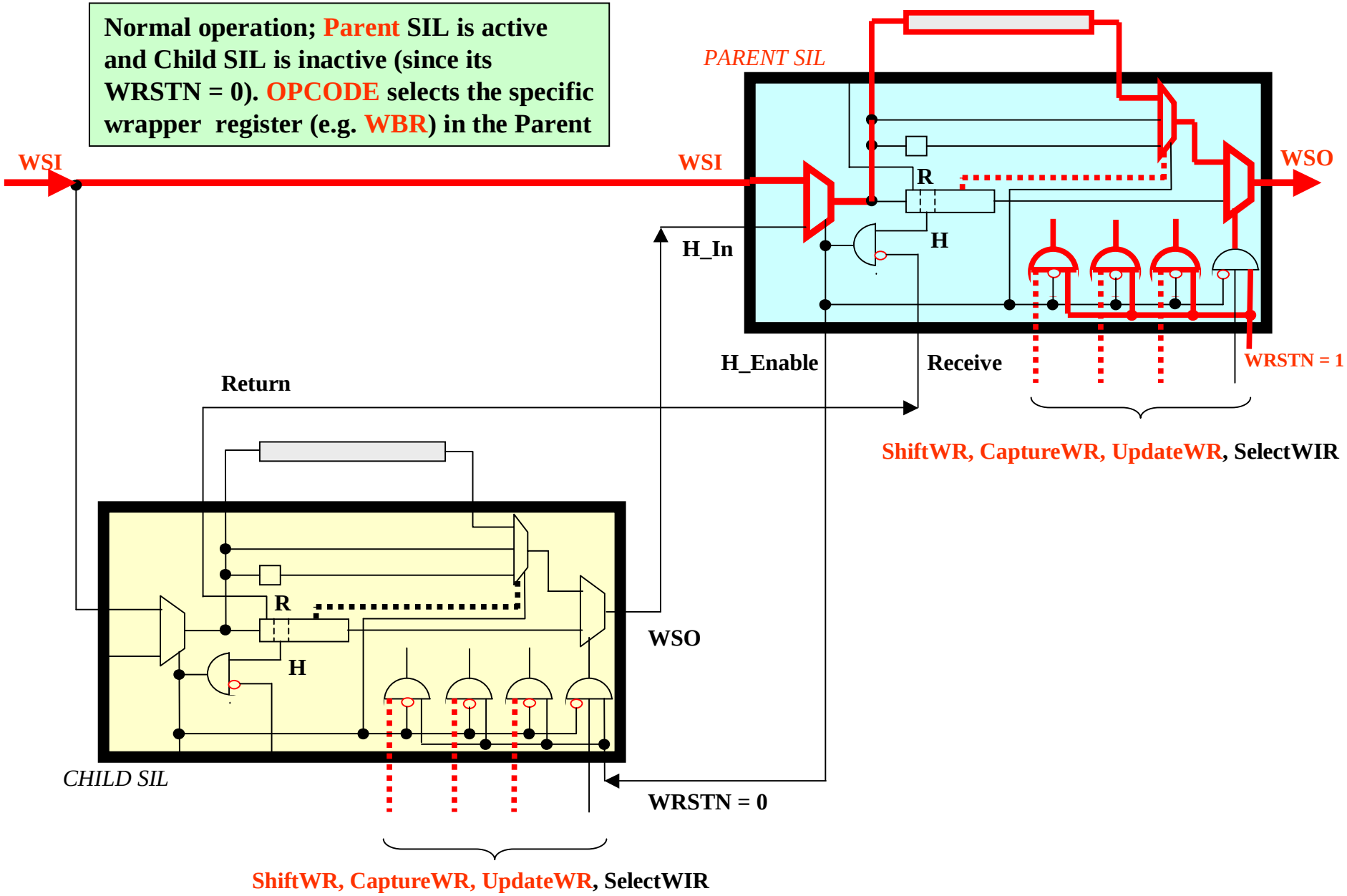
Normal operation; Parent SIL is active and Child SIL is inactive (since its WRSTN = 0). OPCODE selects the specific wrapper register (e.g. WBR) in the Parent
PARENT SIL
WSI
WSI
WSO
R
H
H_In
H_Enable
Receive
WRSTN = 1
Return
ShiftWR, CaptureWR, UpdateWR, SelectWIR
R
H
WSO
CHILD SIL
WRSTN = 0
ShiftWR, CaptureWR, UpdateWR, SelectWIR

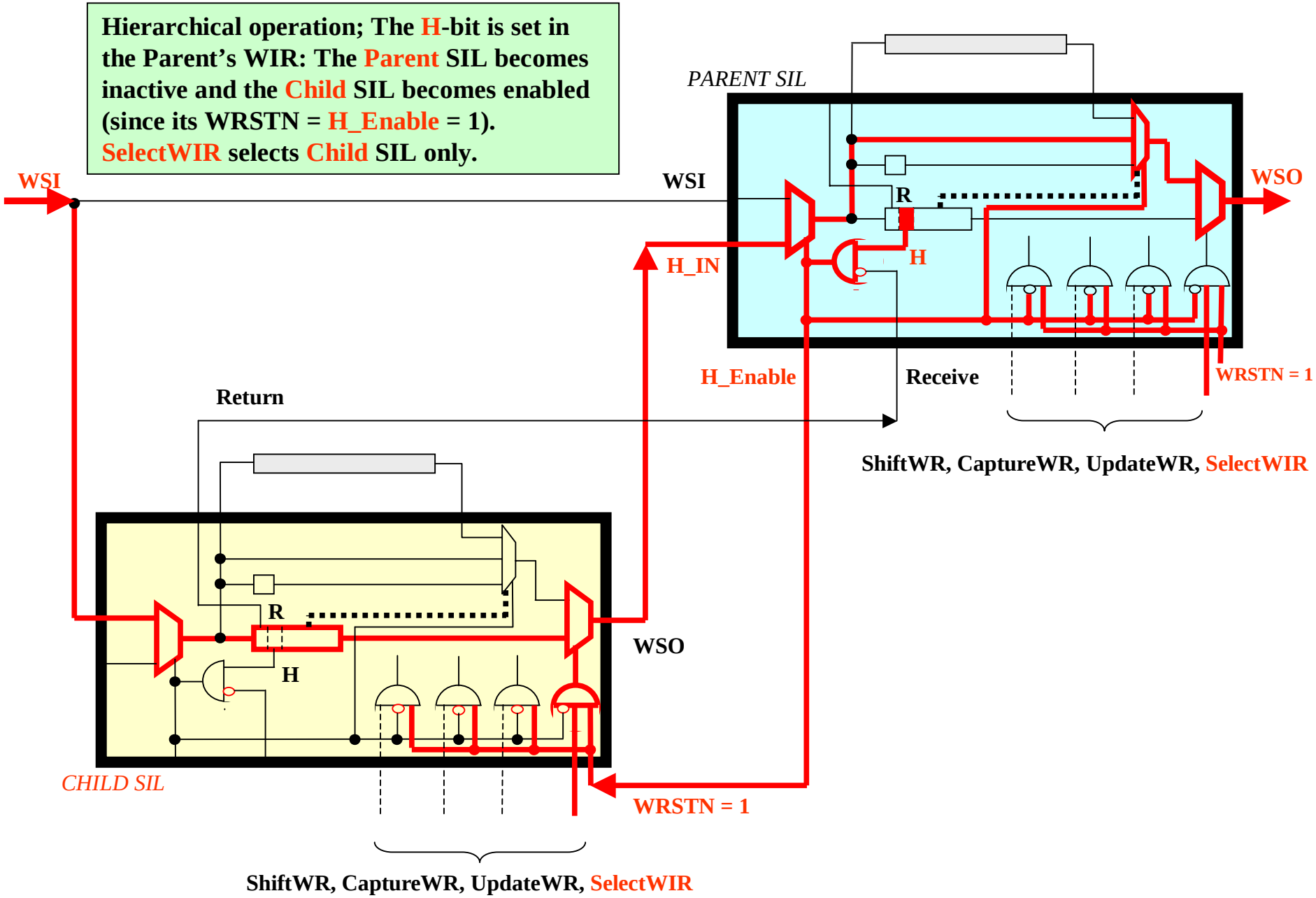
Hierarchical operation; The H-bit is set in the Parent's WIR: The Parent SIL becomes inactive and the Child SIL becomes enabled (since its WRSTN = H_Enable = 1). SelectWIR selects Child SIL only.
PARENT SIL
WSI
WSI
WSO
R
H
H_IN
H_Enable
Receive
WRSTN = 1
Return
ShiftWR, CaptureWR, UpdateWR, SelectWIR
R
H
WSO
CHILD SIL
WRSTN = 1
ShiftWR, CaptureWR, UpdateWR, SelectWIR

Hierarchical operation; The H-bit is set in the Parent's WIR: The Parent SIL becomes inactive and the Child SIL becomes enabled (since its WRSTN = H_Enable = 1). OPCODE selects the specific wrapper register (e.g. WBR) in the Child.

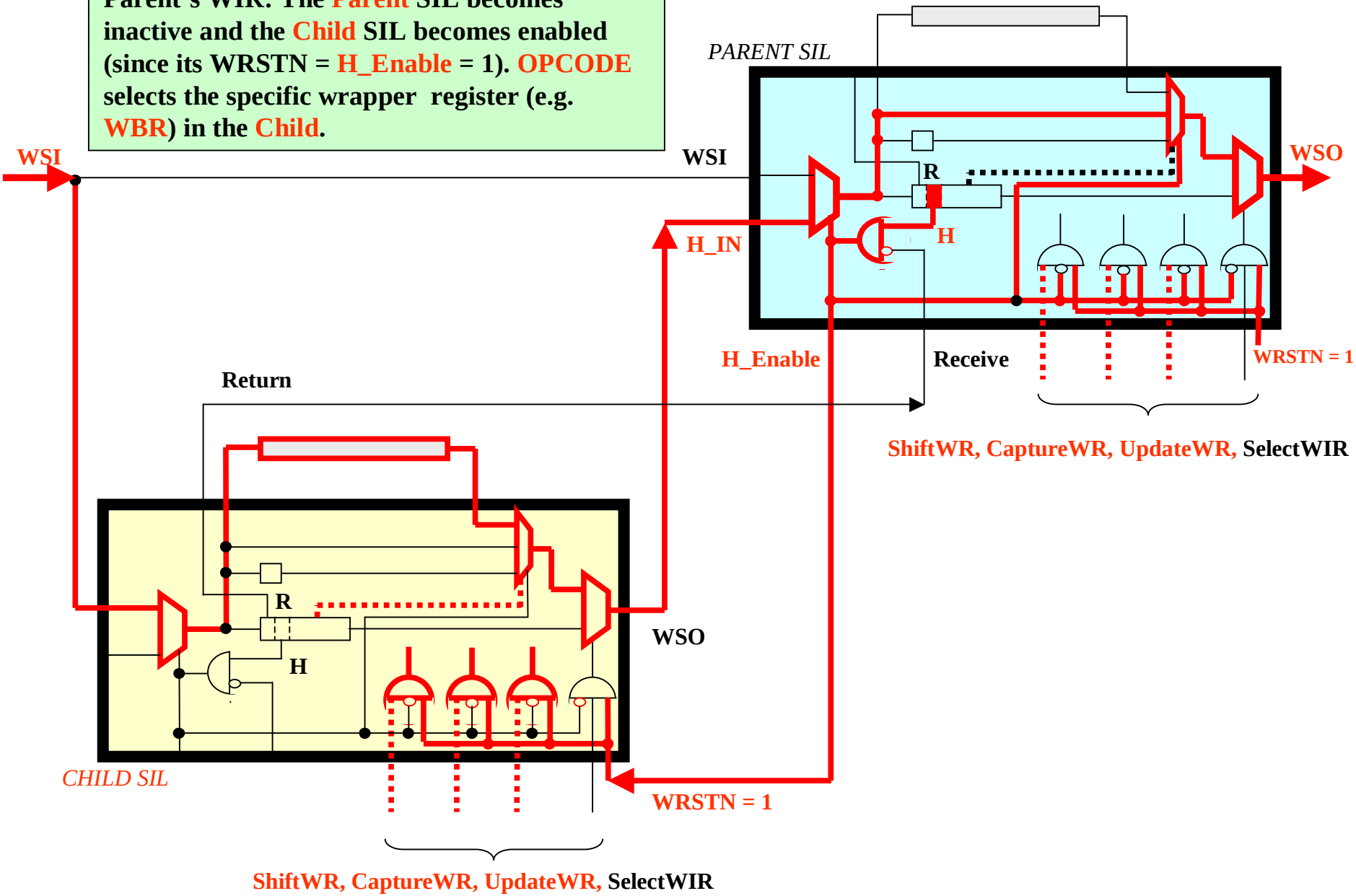

Hierarchical operation – Child is returning control to Parent: Child's POP_Out is set which causes the Parent's PUSH to become 0. This enables the Parent and Disables the Child. Parent is free to respond to SelectWIR and the other WIP controls.

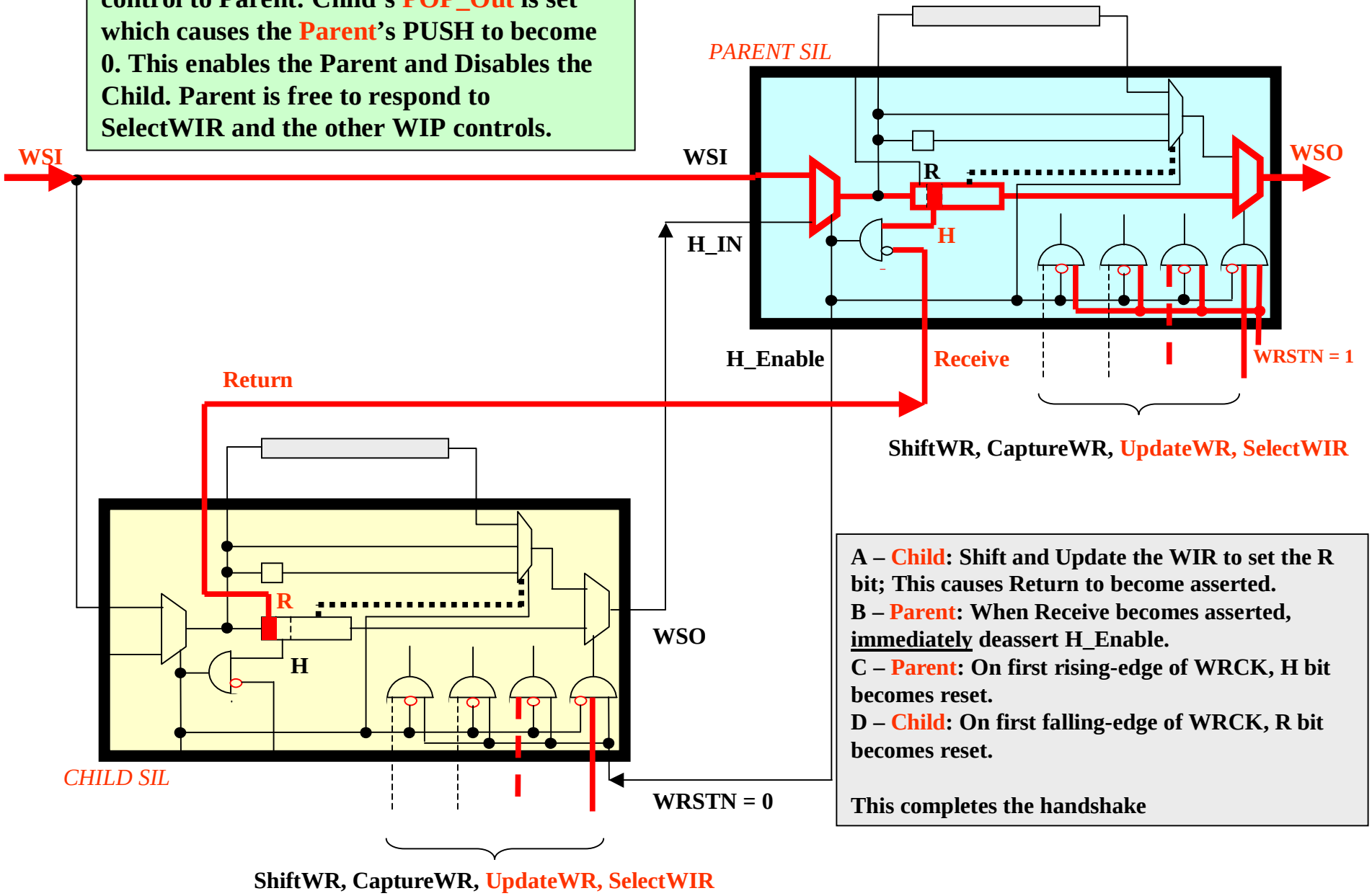

A – Child: Shift and Update the WIR to set the R bit; This causes Return to become asserted.
B – Parent: When Receive becomes asserted, immediately deassert H_Enable.
C – Parent: On first rising-edge of WRCK, H bit becomes reset.
D – Child: On first falling-edge of WRCK, R bit becomes reset.

This completes the handshake

Hierarchical operation – Child has returned control to Parent: Child's

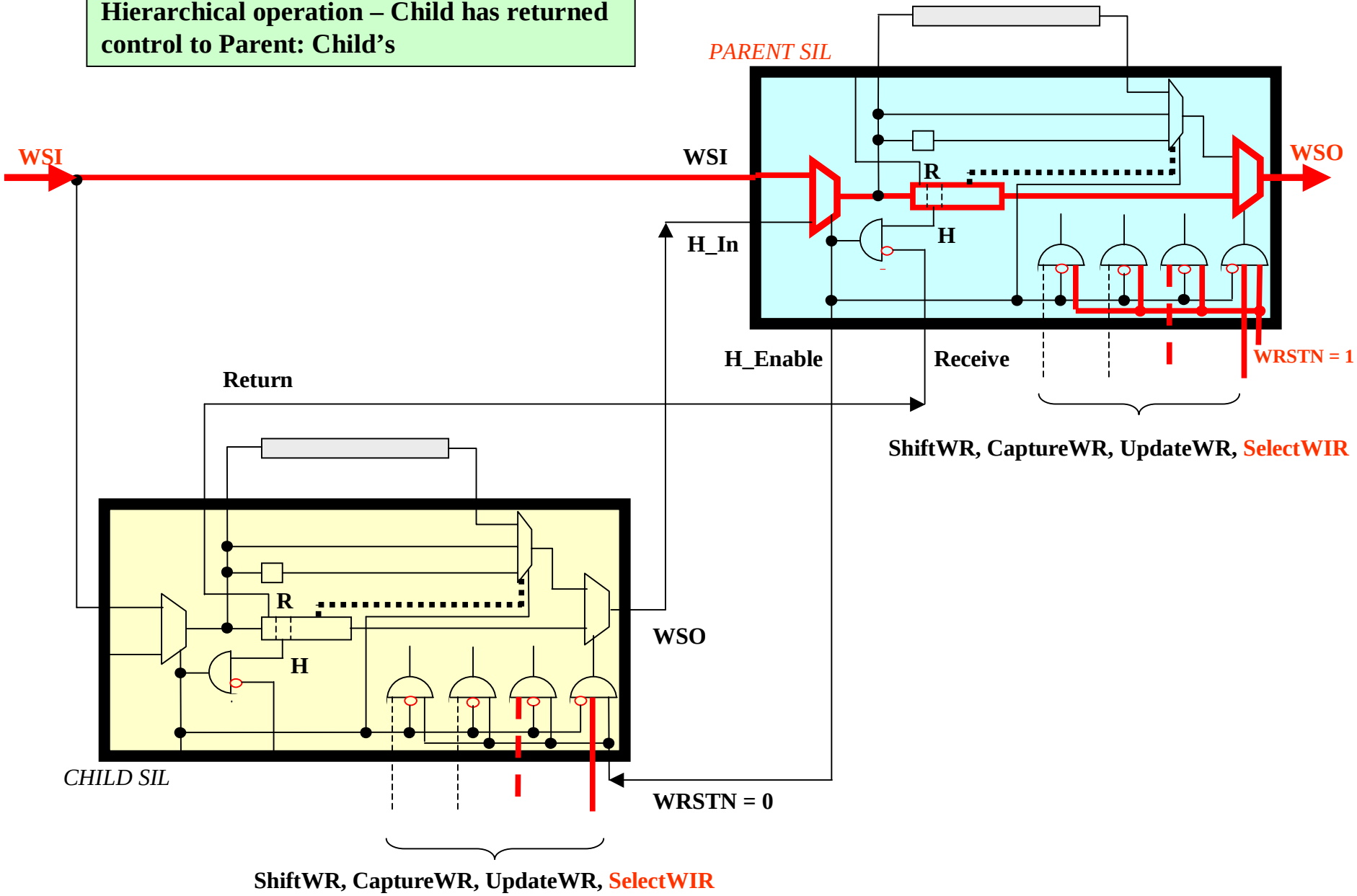

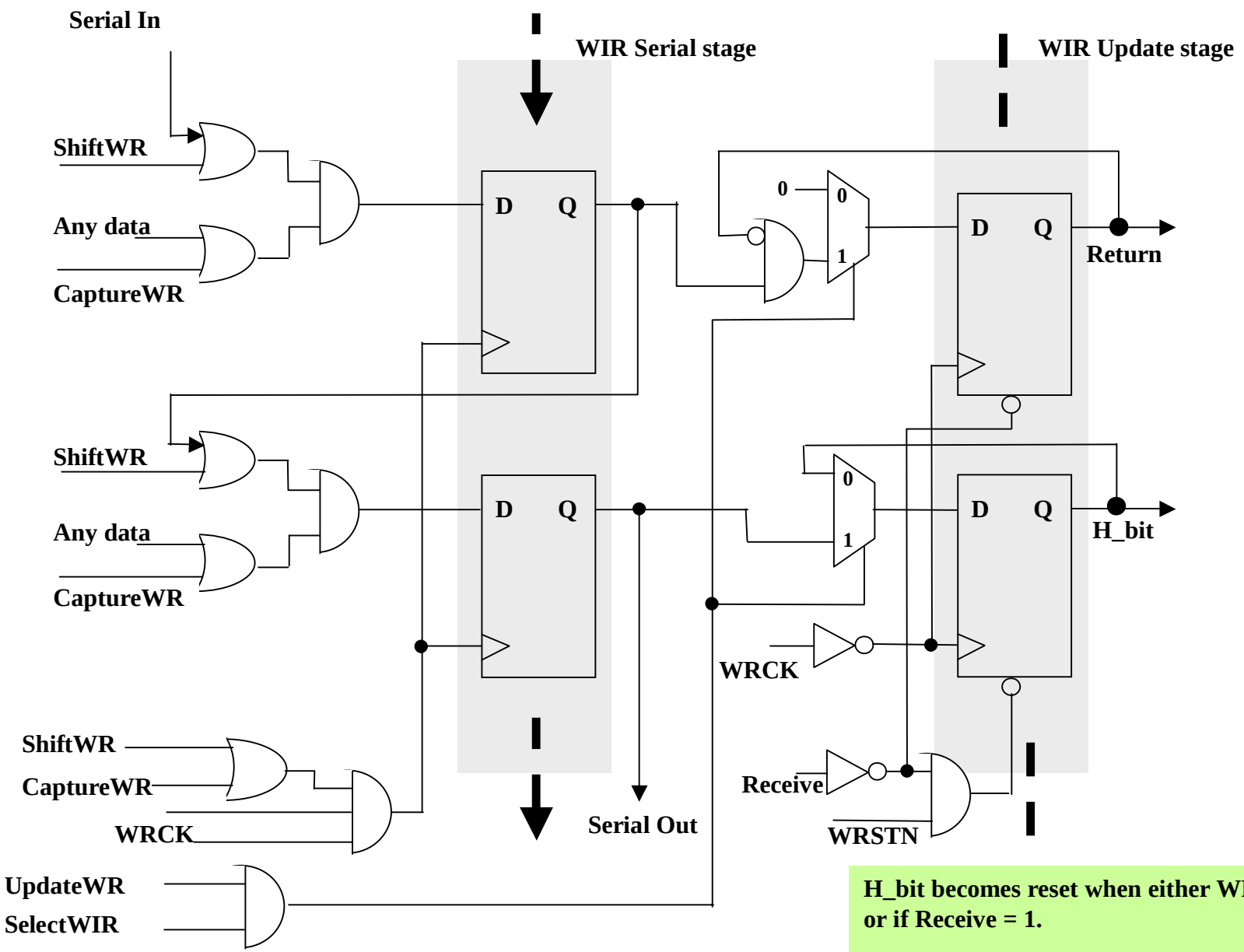

H_bit becomes reset when either WRSTN = 0, or if Receive = 1.

POP_Out becomes reset on the falling-edge of WRCK (i.e. POP_Out remains set for only a single WRCK cycle.

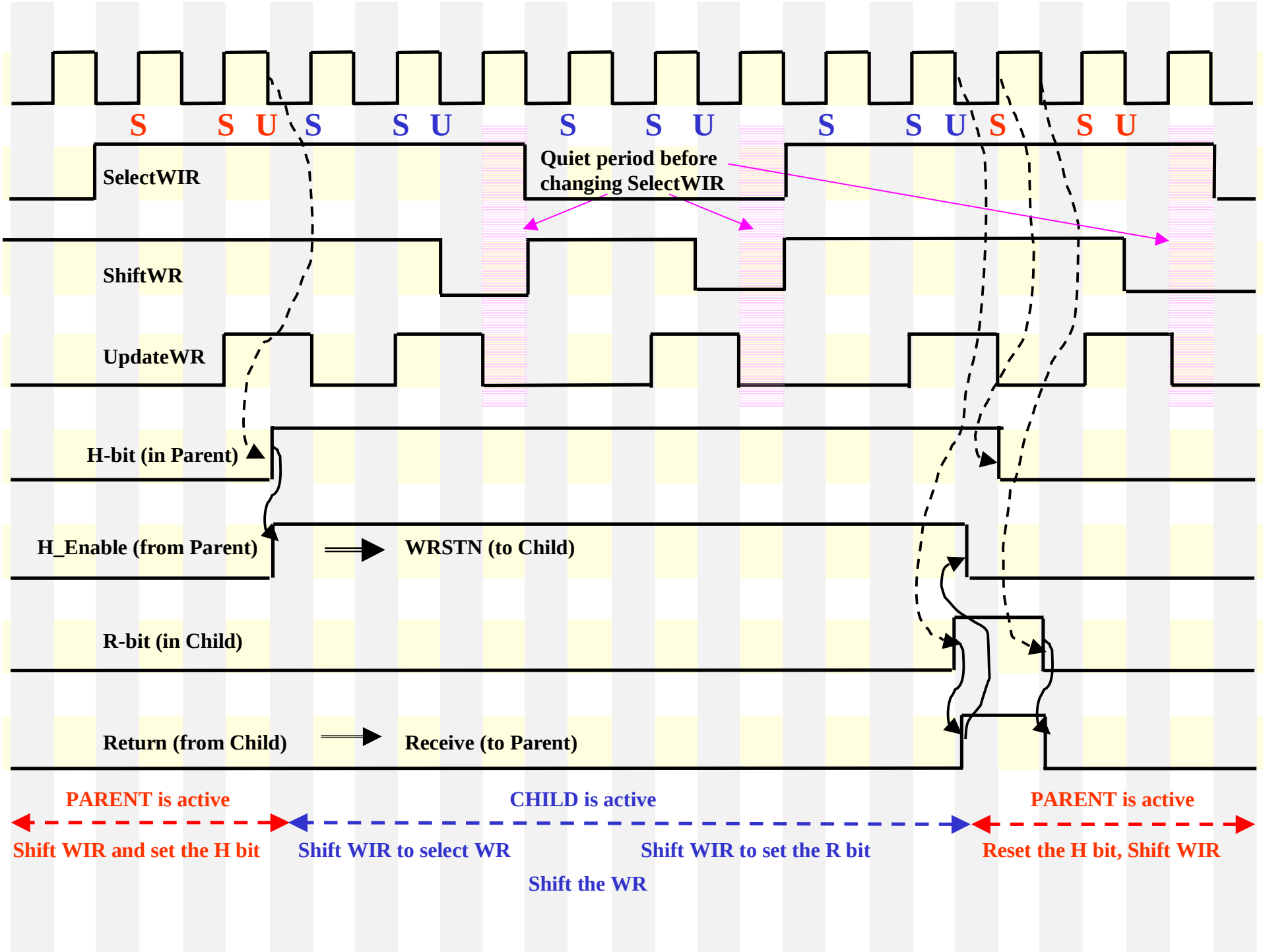
S S U S S U S S U S S U S S U
SelectWIR
Quiet period before
changing SelectWIR
ShiftWR
UpdateWR
H-bit (in Parent)
H_Enable (from Parent)
WRSTN (to Child)
R-bit (in Child)
Return (from Child)
Receive (to Parent)
PARENT is active
CHILD is active
PARENT is active
Shift WIR and set the H bit
Shift WIR to select WR
Shift WIR to set the R bit
Reset the H bit, Shift WIR
Shift the WR