Transformer short-circuit testing

KEMA Laboratories' experience

Shankar Subramany

IEEE Transformer Committee Meeting

Vancouver, October 2016

Ungraded

 DNV GL © 2014

Ungraded

High Power Laboratory, Arnhem

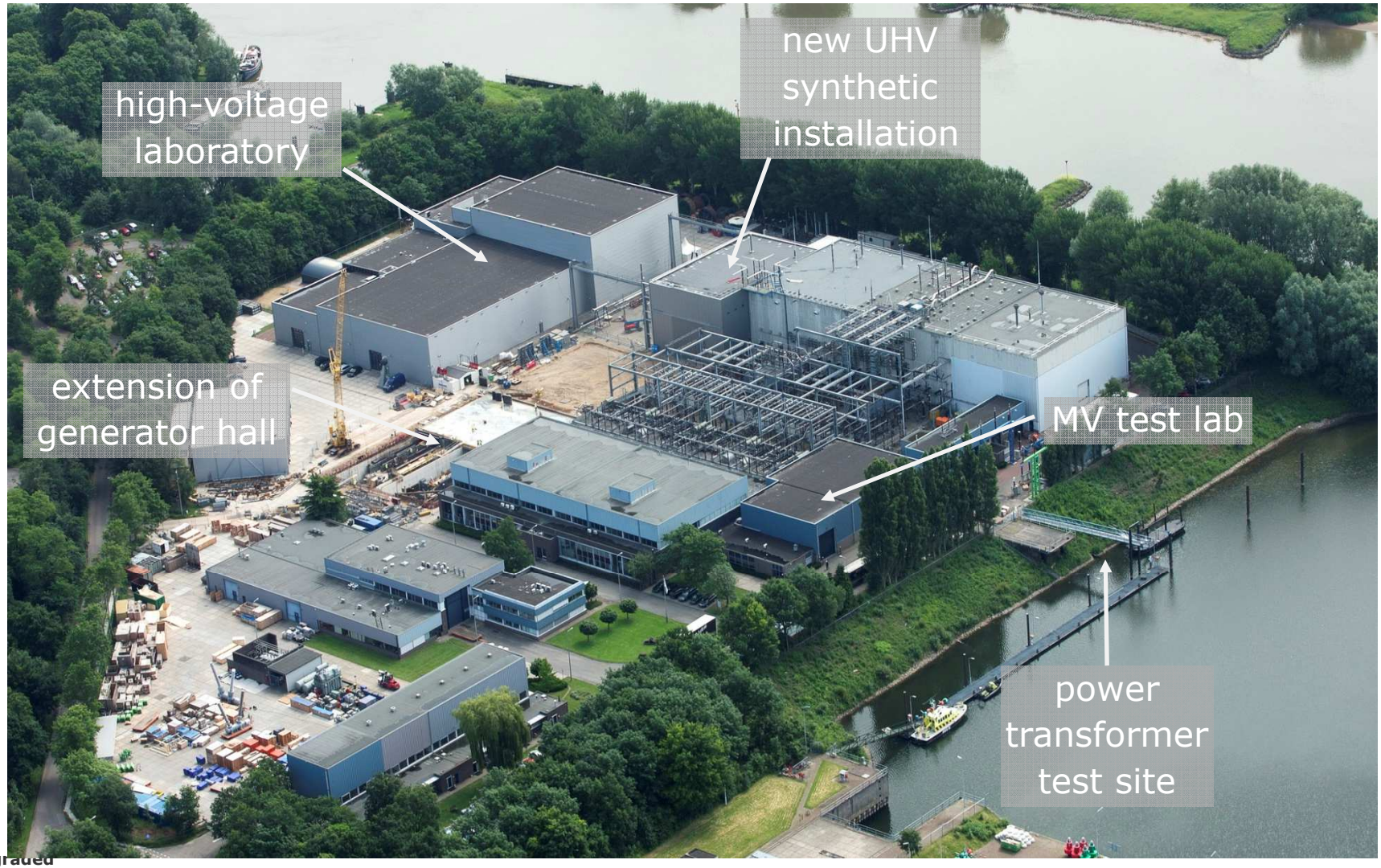

Ungraded

KEMA Lab expansion: prepared for UHV transformers

2 new generators installed

Preparing an 800 kV transformer for a short-circuit test

Ungraded

features of the test circuit

- source can be kept on floating potential
- pre-set test method preferred
- 1,5 phase method preferred
- Very fast master breaker

Ungraded

Power transfer source to test-object

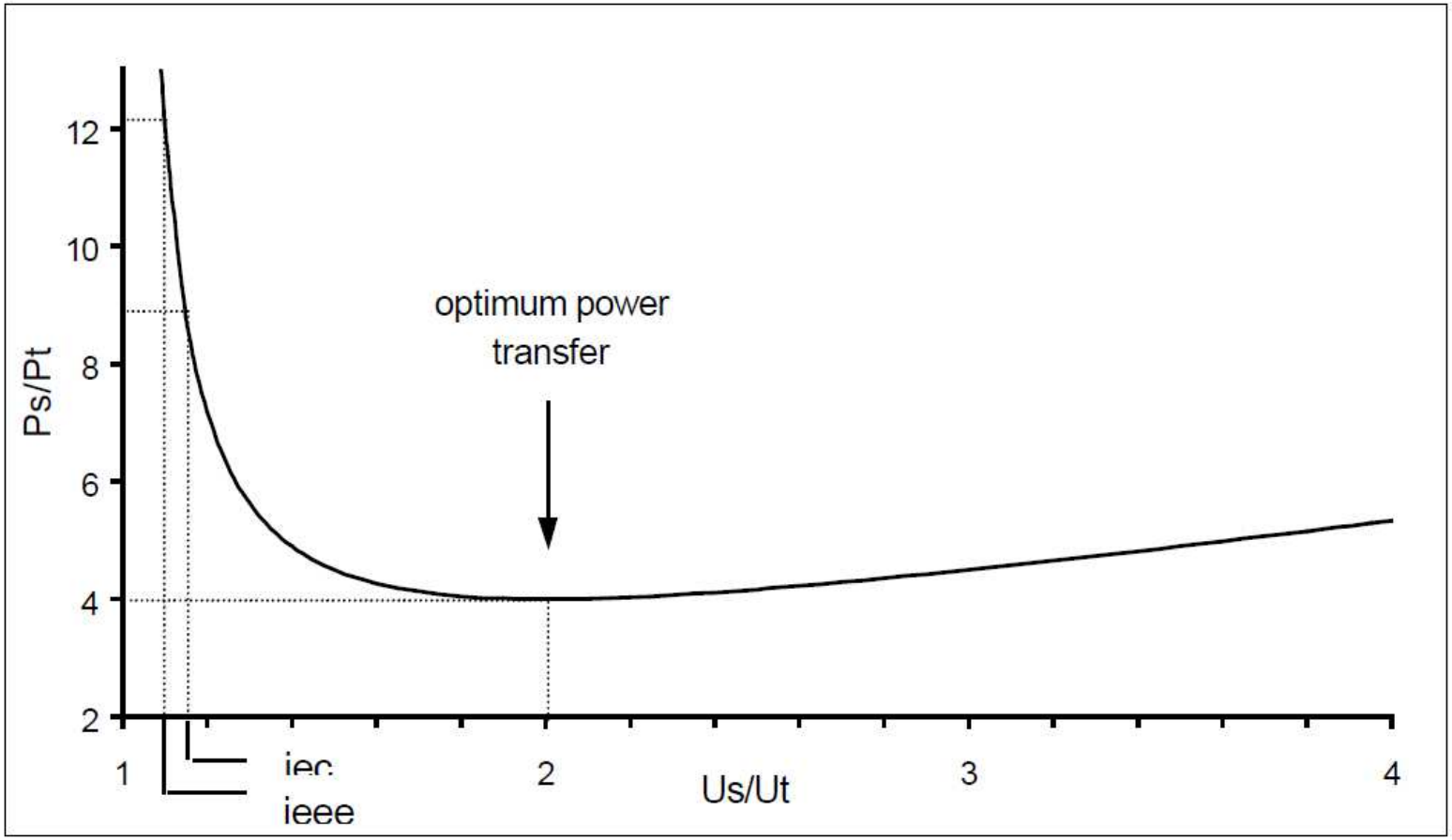

Ungraded

Leading laboratories use the 1.5 or 3-phase method to realize internal stresses as in service

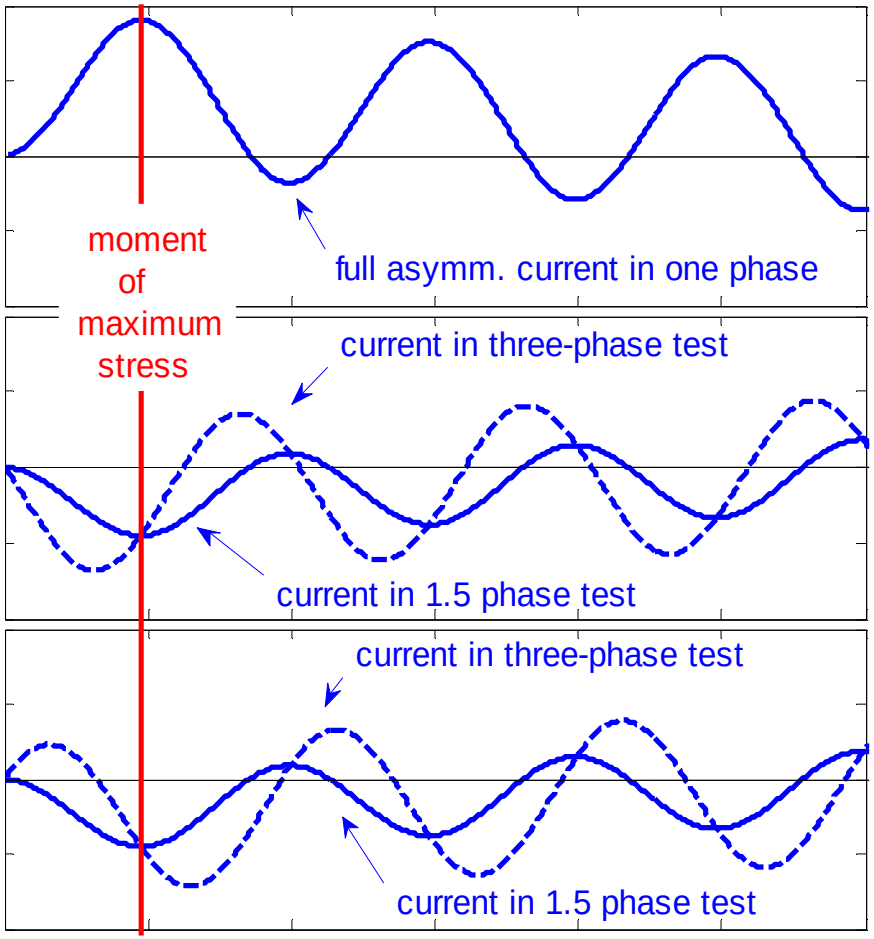

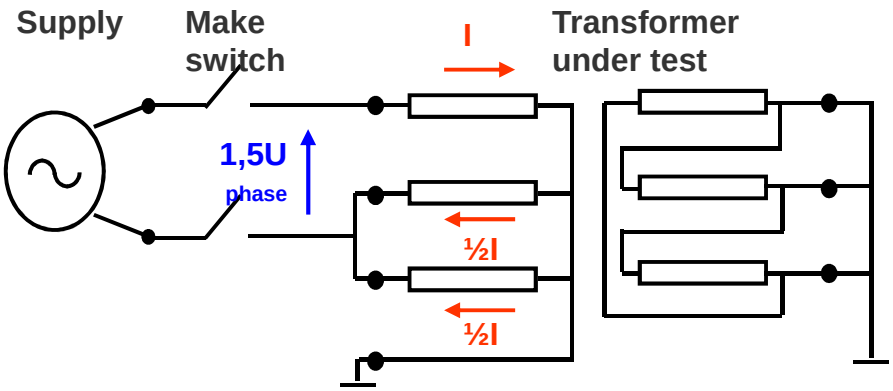

The 1.5 phase method results in similar mechanical stresses as full 3-phase testing at the critical instant of asymmetrical current peak.

Ungraded

Up to 800 kV class transformers

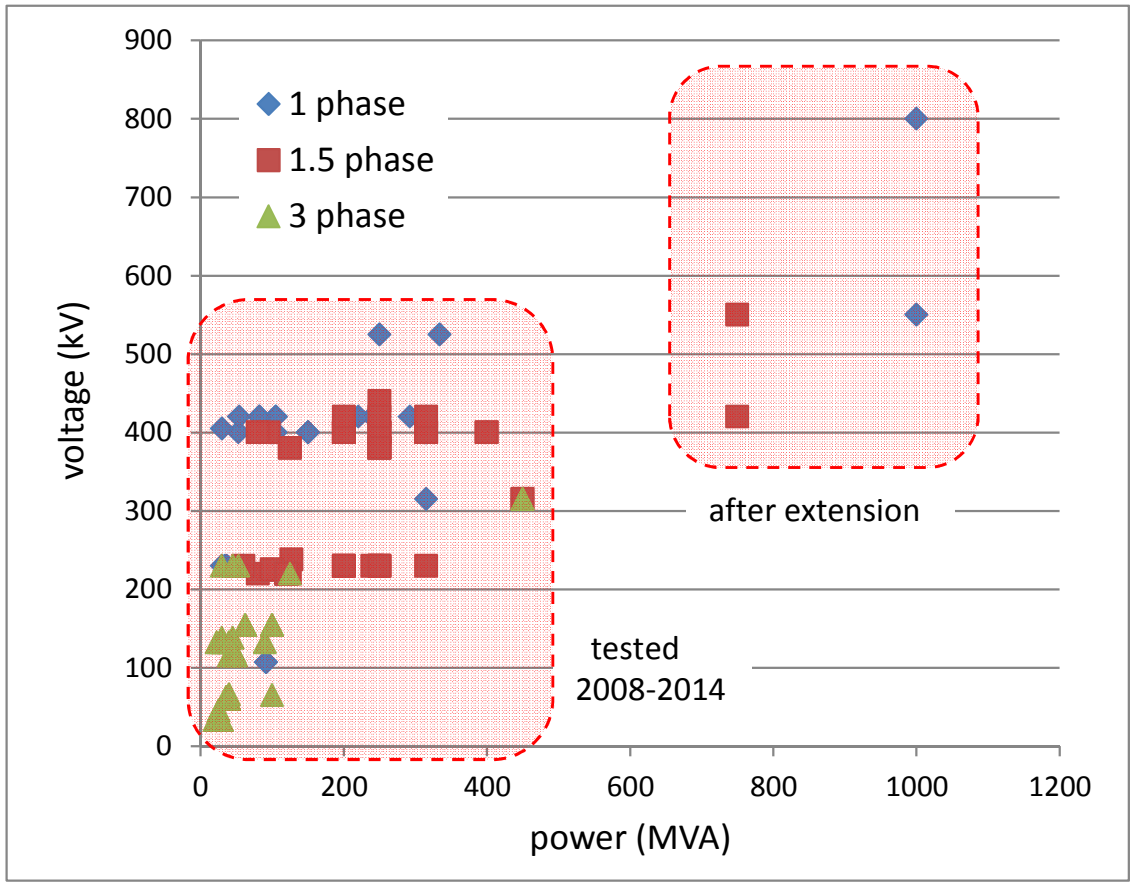

acceptance test of a new 400 kV test transformer

Extension project: from 4 to 6 generators
from 6 to 10 short-circuit transformers

Ungraded

Short-circuit testing in grid- and generator supplied labs

switching at high-voltage

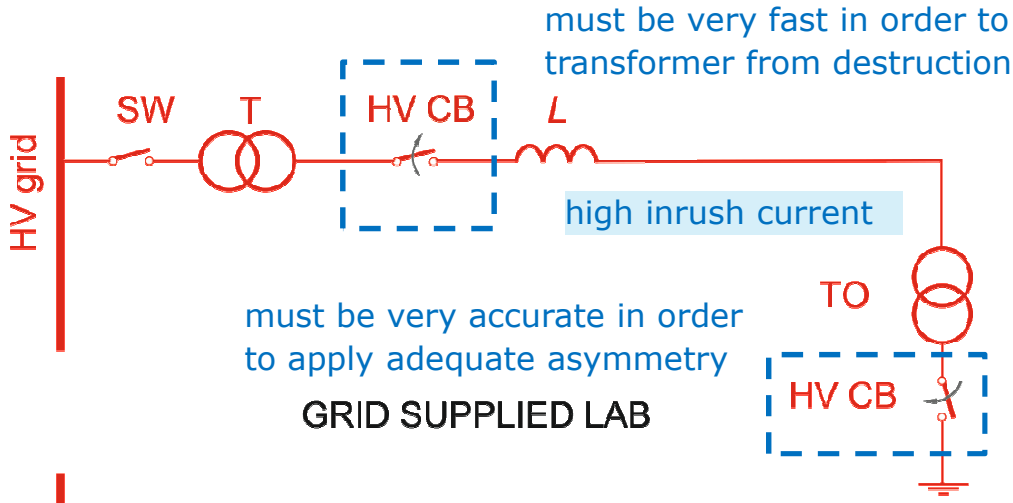

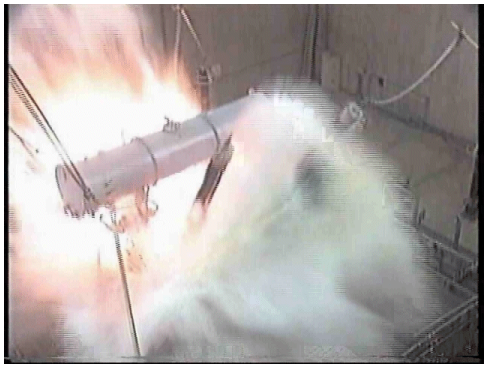

switching at medium-voltage

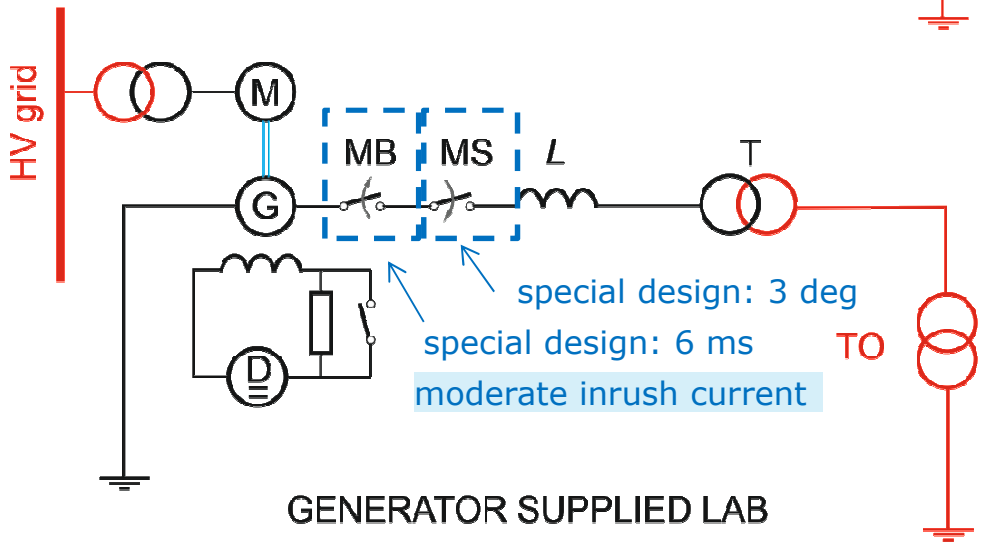

Ungraded

Testing

- IEC 60076-5
- three-phase transformer tested with 9 short-circuit applications of 0.25 s
- Criterion is impedance change before → after short-circuit current application
- ΔX ≤ 1% for transformers ≥ 100 MVA + Pass routine tests and visual inspection after test
- Testing is not destructive

Ungraded

Some discussions in the IEC Maintenance team

- Impedance change trend during testing
- Number of short-circuits in normal service life?
- Life of transformer after short-circuit tests – testing is not destructive
- How best to test the tertiary windings?
- When and how mock-up transformers can be made and tested?
- What design review can show and what it cannot?

Ungraded

What to learn from test results?

- Possibility to assess 'winding status' through evolution of reactance measurement

- Hidden damage to voltage regulation winding

Ungraded

variation of reactance after short-circuit tests

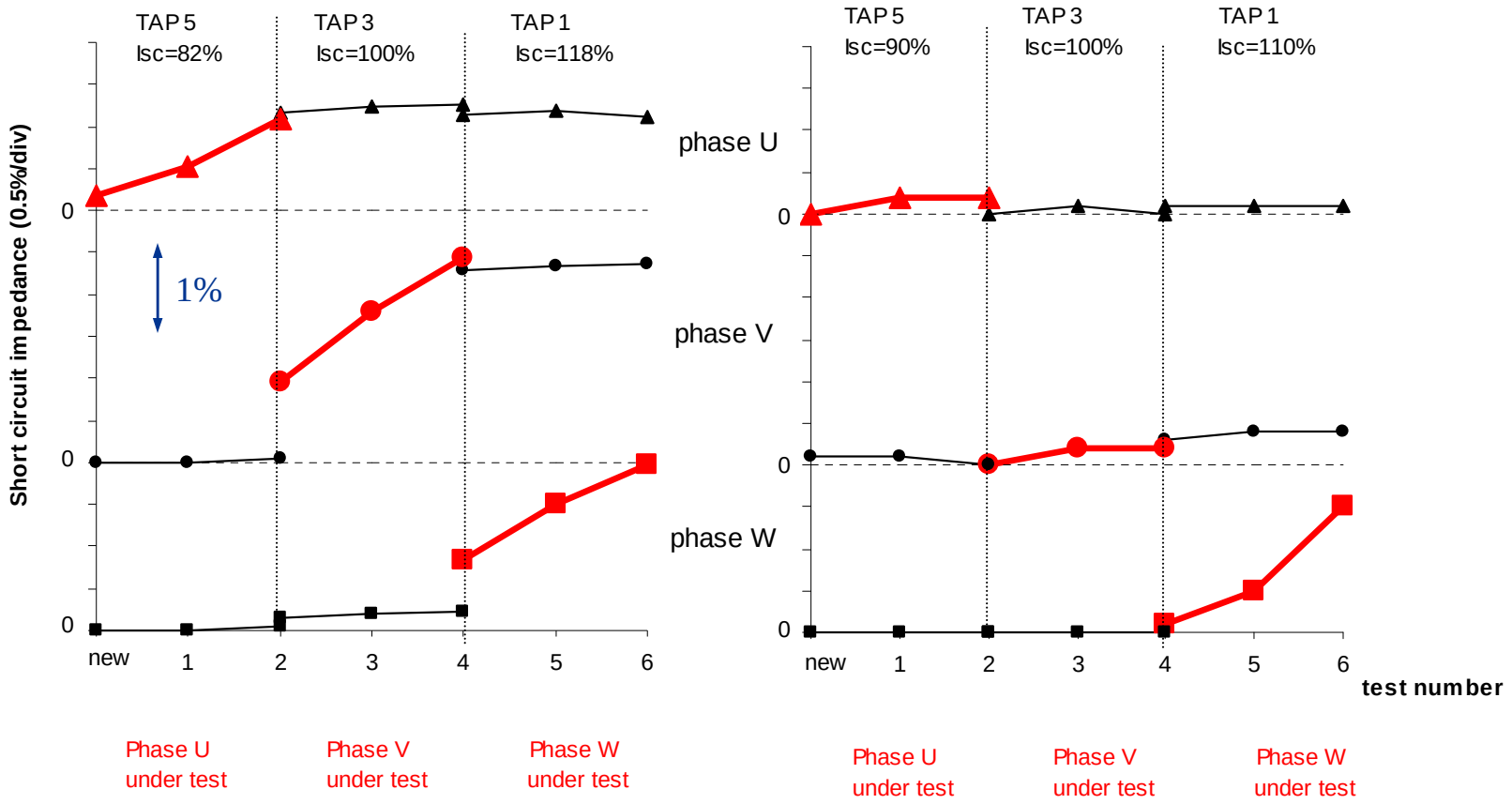

- systematic (design?) flaw
- particular (production?) flaw

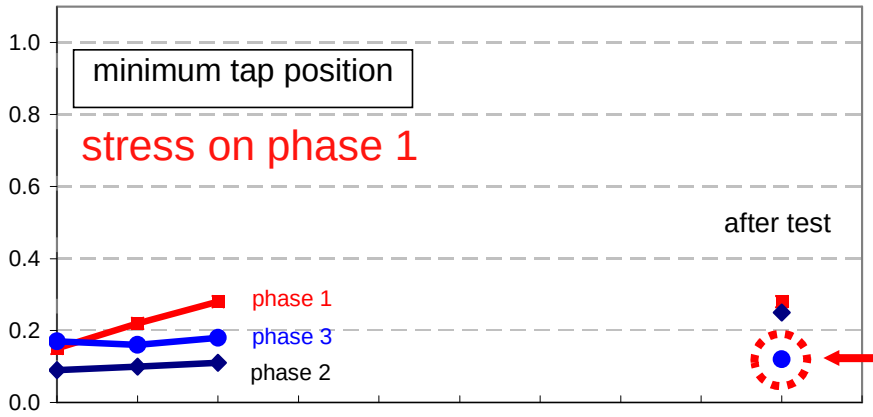

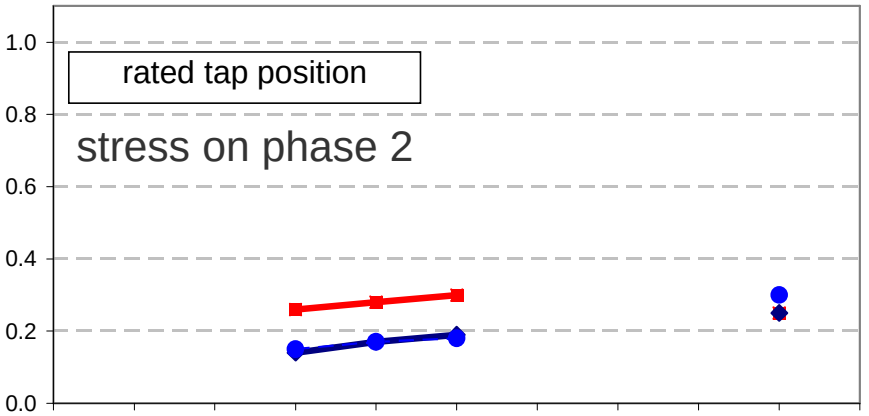

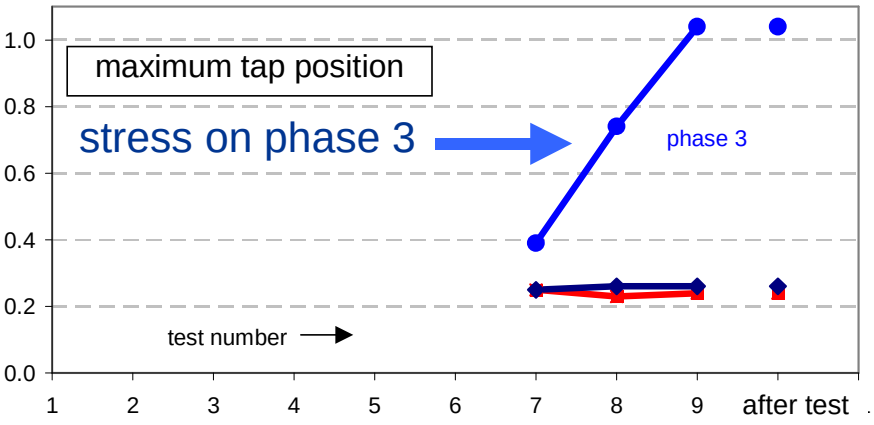

Summary results

after test, SC impedance of winding excl. regulation << with regulation

increase of reactance is entirely due to regulation winding

Increase of reactance of regulation winding >> 1%

Results

- 1996 – 2015: 297 tests series ≥ 25 MVA
- upto to 440 MVA, 525 kV
- in 230 cases no problems at short-circuit
- 67 cases a problem, mostly reactance change too large
- 39 transformers re-tested
- 78 visual inspection, 7 failed in that stage

- **initial failure rate 67/297 = 23%**

Ungraded

Test statistics ≥ 25MVA

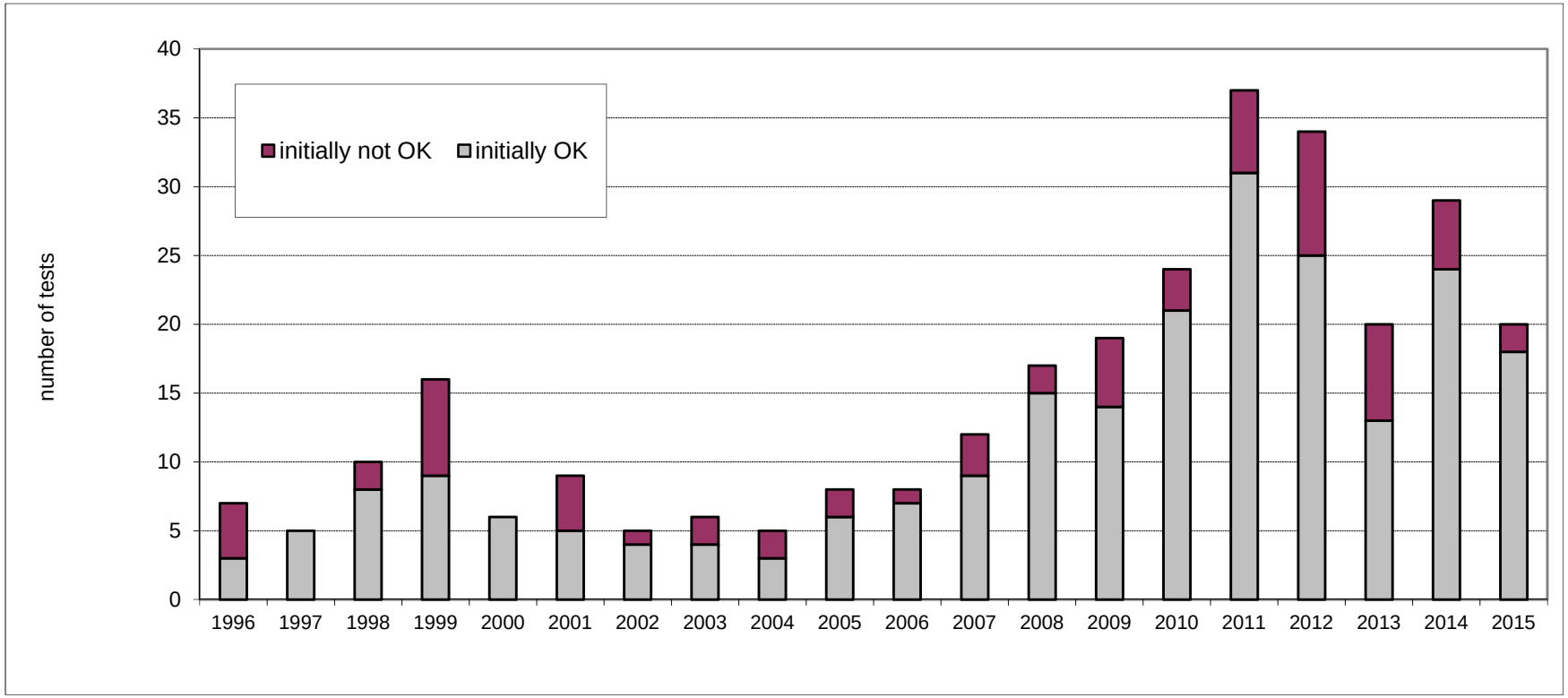

Ungraded

Test statistics ≥ 25MVA

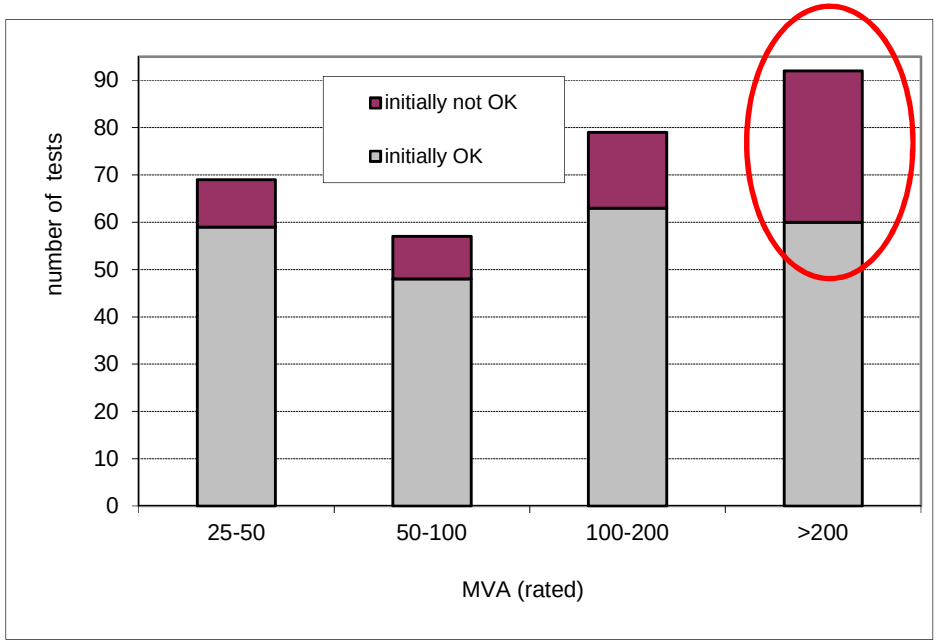

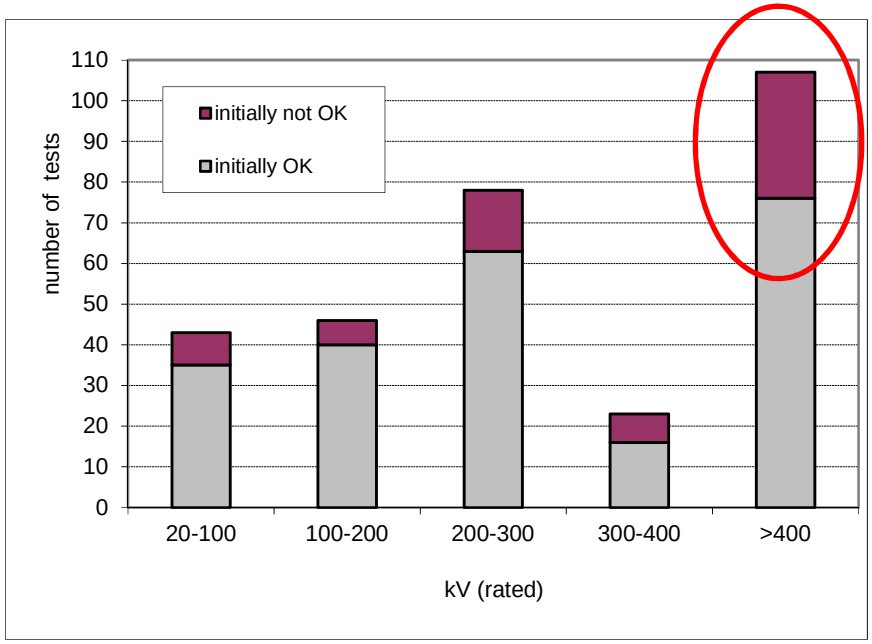

significant higher failure rate at high-end of power and voltage

Ungraded

Visible failure modes

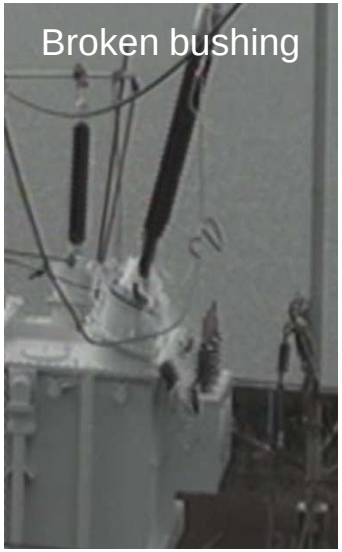

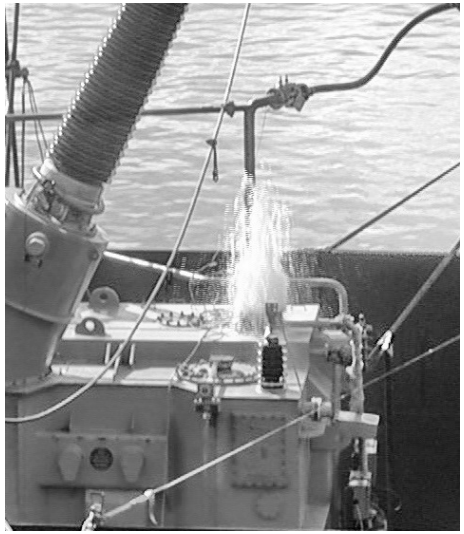

Ungraded

DNV GL © 2014

Does calculation cover all aspects of short-circuit withstand?

- Calculation method given in the Standard is only based on static forces and do not cover all parts of the transformer. The dynamic behaviour is not considered

- Following design aspects are not/cannot be addressed fully:

  - Materials are considered ideal, and do not take into account poor workmanship, inhomogeneities, production issues
  - Models consider axial and rotational symmetry, whereas failure frequently are observed at inhomogeneity's like transpositions, crossover locations, pitch of winding, leads etc.
  - Do not take into account friction of turns in axial direction, magnetic phase to phase interaction
  - cross overs of turns (inside the winding) transpositions of parallel conductors (inside the winding)
  - exit leads of the windings (fixation to prevent movement and friction (wear of insulation) of exit lead)
  - support of cleats and leads
  - connections to OLTC

Ungraded

Does calculation cover all aspects of short-circuit withstand?

- support of leads to bushings
- stability of the radial support of windings (for example spacers used during winding the coil (untreated, dried, dried and oil impregnated)
- effect of varying densities of the different windings due to axial compressing forces
- dynamic movement of the oil
- Successive movement of the winding, core, clamping arrangements and leads due to accumulated stresses during a series of short-circuit tests, leading to a failure after a certain number shots cannot be simulated/calculated
- Many observed failure modes cannot be predicted by models, like oil spill, broken bushings, internal winding, deformation of leads.

Ungraded

transposition between layers

windings are not rotational symmetric

Table A.1 – Comparison of forces and stresses in core-type transformers

Type of force/stress	LV winding				MV winding				HV winding				Tap winding			
	act.	ref.	all.	crit.	act.	ref.	all.	crit.	act.	ref.	all.	crit.	act.	ref.	all.	crit.
Mean hoop tensile stress on disc-, helical- and layer-type windings (MPa)																
Mean hoop compressive stress on disc, helical, single layer type windings (MPa)																
Equivalent mean hoop compressive stress on multi-layer-type windings (MPa)																
Stress due to radial bending of conductors between axial sticks and spacers (MPa)																
Stress due to axial bending of conductors between radial spacers (MPa)																
Thrust force acting on the low-voltage winding lead exits (kN)																
Maximum axial compression force on each physical winding (kN)																

The **actua**l value is the calculated value of the transformer under review.
The **allowable** value is the design criteria of the manufacturer (including all his experience, tests, statistics and safety margins) to meet the specification.
The **critical** value of a certain parameter is a number, one only can determine this if there were failures. In the case of lack of test data on this parameter it is just an estimated guess.

..this is what that needs to be avoided…

Thank you for your kind attention!

before test

after test

shankar.subramany@dnvgl.com

Ungraded